ILCE-7M2/7M2K

SERVICE MANUAL

LEVEL 3

Ver. 1.1 2015.08

Revised-1

Replace the previously issued SERVICE MANUAL 9-896-717-11 with this Manual.

Photo: ILCE-7M2 (Main body)

US Model
Canadian Model
AEP Model
UK Model
Russian Model
E Model
Indian Model
Australian Model
Chinese Model
Korea Model
Japanese Model
Tourist Model

SERVICE NOTE (Check the following note before the service.)

[About the service of this model]
ILCE-7M2K is commodity that packed the Interchangeable Lens Digital Camera and Interchangeable Lens.
Refer to each following service manual the Interchangeable Lens kit, when you repair.

Model	Lens	Service Manual of Lens
ILCE-7M2	No supplied lens	No supplied lens
ILCE-7M2K	SEL2870 (FE 28-70mm F3.5-5.6 OSS)	9-834-758-[][]

INTERCHANGEABLE LENS DIGITAL CAMERA

The components identified by mark ⚠ or dotted line with mark ⚠ are critical for safety. Replace only with part number specified.	Les composants identifiés par une marque ⚠ sont critiques pour la sécurité. Ne les remplacer que par une pièce portant le numéro spécifié.

SONY®

ILCE-7M2/7M2K_L3
9-896-717-12

Sony Corporation

989671712.pdf

Revision History

*: S.M. revised only top cover.

Ver.	Date	History	Contents	S.M. Rev. issued
1.0	2014.12	Official Release	—	—
1.1	2015.08	Revised-1 (A1 15-036)	• Addition of Indian model.	Yes*

2015H08-1
© 2015.08
Published by Sony Techno Create Corporation

Caution
Danger of explosion if battery is incorrectly replaced.
Replace only with the same or equivalent type.
Dispose of used batteries according to the instructions.

注意
如果电池更换不当会有爆炸危险。
只能用同样类型或等效类型的电池来更换。
务必按照说明处置用完的电池。

SAFETY-RELATED COMPONENT WARNING!!

COMPONENTS IDENTIFIED BY MARK ⚠ OR DOTTED LINE WITH MARK ⚠ ON THE SCHEMATIC DIAGRAMS AND IN THE PARTS LIST ARE CRITICAL TO SAFE OPERATION. REPLACE THESE COMPONENTS WITH SONY PARTS WHOSE PART NUMBERS APPEAR AS SHOWN IN THIS MANUAL OR IN SUPPLEMENTS PUBLISHED BY SONY.

ATTENTION AU COMPOSANT AYANT RAPPORT À LA SÉCURITÉ!

LES COMPOSANTS IDENTIFIÉS PAR UNE MARQUE ⚠ SUR LES DIAGRAMMES SCHÉMATIQUES ET LA LISTE DES PIÈCES SONT CRITIQUES POUR LA SÉCURITÉ DE FONCTIONNEMENT. NE REMPLACER CES COMPOSANTS QUE PAR DES PIÈCES SONY DONT LES NUMÉROS SONT DONNÉS DANS CE MANUEL OU DANS LES SUPPLÉMENTS PUBLIÉS PAR SONY.

SAFETY CHECK-OUT

After correcting the original service problem, perform the following safety checks before releasing the set to the customer.

1. Check the area of your repair for unsoldered or poorly-soldered connections. Check the entire board surface for solder splashes and bridges.
2. Check the interboard wiring to ensure that no wires are “pinched” or contact high-wattage resistors.
3. Look for unauthorized replacement parts, particularly transistors, that were installed during a previous repair. Point them out to the customer and recommend their replacement.
4. Look for parts which, through functioning, show obvious signs of deterioration. Point them out to the customer and recommend their replacement.
5. Check the B+ voltage to see it is at the values specified.
6. Flexible Circuit Board Repairing
   - Keep the temperature of the soldering iron around 350°C during repairing.
   - Do not touch the soldering iron on the same conductor of the circuit board (within 3 times).
   - Be careful not to apply force on the conductor when soldering or unsoldering.

UNLEADED SOLDER

This unit uses unleaded solder.
Boards requiring use of unleaded solder are printed with the lead free mark (LF) indicating the solder contains no lead.
(**Caution:** Some printed circuit boards may not come printed with the lead free mark due to their particular size.)

: LEAD FREE MARK

Be careful to the following points to solder or unsolder.

- Set the soldering iron tip temperature to 350°C approximately.
  If cannot control temperature, solder/unsolder at high temperature for a short time.
  Caution: The printed pattern (copper foil) may peel away if the heated tip is applied for too long, so be careful!
  Unleaded solder is more viscous (sticky, less prone to flow) than ordinary solder so use caution not to let solder bridges occur such as on IC pins, etc.
- Be sure to control soldering iron tips used for unleaded solder and those for leaded solder so they are managed separately. Mixing unleaded solder and leaded solder will cause detachment phenomenon.

Caution
電池の交換は，正しく行わないと破裂する恐れがあります。
電池を交換する場合には必ず同じ型名の電池又は同等品と交換してください。
使用済み電池は，取扱指示に従って処分してください。

サービス，点検時には次のことにご注意ください。

1. 注意事項をお守りください。
   サービスのとき特に注意を要する個所については，キャビネット，シャーシ，部品などにラベルや捺印で注意事項を表示しています。これらの注意書きおよび取扱説明書等の注意事項を必ずお守りください。
2. 指定部品のご使用を
   セットの部品は難燃性や耐電圧など安全上の特性を持ったものとなっています。従って交換部品は，使用されていたものと同じ特性の部品を使用してください。特に回路図，部品表に⚠印で指定されている安全上重要な部品は必ず指定のものをご使用ください。
3. 部品の取付けや配線の引きまわしはもとどおりに
   安全上，チューブやテープなどの絶縁材料を使用したり，プリント基板から浮かして取付けた部品があります。また内部配線は引きまわしやクランパによって発熱部品や高圧部品に接近しないよう配慮されていますので，これらは必ずもとどおりにしてください。
4. サービス後は安全点検を
   サービスのために取外したネジ，部品，配線がもとどおりになっているか，またサービスした個所の周辺を劣化させてしまったところがないかなどを点検し，安全性が確保されていることを確認してください。
5. チップ部品交換時の注意
   - 取外した部品は再使用しないでください。
   - タンタルコンデンサのマイナス側は熱に弱いため交換時は注意してください。
6. フレキシブルプリント基板の取扱いについて
   - こて先温度を約350℃に設定して行ってください。
   - 同一パターンに何度もこて先を当てないでください。（3回以内）
   - パターンに力が加わらないよう注意してください。

無鉛半田について

本機には無鉛半田が使用されています。
無鉛半田を使用している基板には，無鉛(Lead Free)を意味するレッドフリーマークがプリントされています。
(**注意：**基板サイズによっては，無鉛半田を使用していてもレッドフリーマークがプリントされていないものがあります)

：レッドフリーマーク

無鉛半田は，下記の点に注意して使用してください。

- 半田こてのこて先温度は約350℃に設定してください。
  温度調節が無理な場合は，高温短時間で作業を行ってください。
  注意：半田こてを長く当てすぎると，基板のパターン(銅箔)がはがれてしまうことがありますので，注意してください。また，従来の半田よりも粘性が強いため，IC端子などが半田ブリッジしないように注意してください。
- 半田こてのこて先は，必ず無鉛半田用と有鉛半田用に分けて管理してください。
  無鉛半田と有鉛半田が混在すると剥離現象が発生してしまいます。

(ENGLISH)

NOTE:

- -XX, -X mean standardized parts, so they may have some differences from the original one.
- Items marked "*" are not stocked since they are seldom required for routine service. Some delay should be anticipated when ordering these items.
- The mechanical parts with no reference number in the exploded views are not supplied.
- Due to standardization, replacements in the parts list may be different from the parts specified in the diagrams or the components used on the set.
- CAPACITORS:
  uF: μF
- COILS
  uH: μH
- RESISTORS
  All resistors are in ohms.
  METAL: metal-film resistor
  METAL OXIDE: Metal Oxide-film resistor
  F: nonflammable
- SEMICONDUCTORS
  In each case, u: μ, for example:
  uA...: μA... , uPA... , μPA... ,
  uPB... , μPB... , μPC... , μPC... ,
  uPD..., μPD...

When indicating parts by reference number,please include the board name.

The components identified by mark ⚠ or dotted line with mark are critical for safety.
Replace only with part number specified.

Les composants identifiés par une marque ⚠ sont critiques pour la sécurité.
Ne les remplacer que par une pièce portant le numéro spécifié.

Caution
Danger of explosion if battery is incorrectly replaced.
Replace only with the same or equivalent type.
Dispose of used batteries according to the instructions.

注意
如果电池更换不当会有爆炸危险。
只能用同样类型或等效类型的电池来更换。
务必按照说明处置用完的电池。

Note 1: Be sure to read "Precautions for Replacement of Imager" on page 6-1.

Note 2: Replace the battery holder (BH0200) together when replacing the lithium secondary battery (BT0200) on the SY-1049 board. (The battery holder removed once cannot be used again.) When mounting these parts, mount new battery holder first and attach new lithium storage battery next.

(JAPANESE)

【使用上の注意】

- ここに記載されている部品は，補修用部品であるため，回路図及びセットに付いている部品と異なる場合があります。
- -XX, -Xは標準化部品のため，セットに付いている部品と異なる場合があります。
- *印の部品は常備在庫しておりません。
- コンデンサの単位でuFはμFを示します。
- 抵抗の単位Ωは省略してあります。
  金　　被：金属被膜抵抗。
  サンキン：酸化金属被膜抵抗。
- インダクタの単位でuHはμHを示します。
- 半導体の名称でuA..., uPA..., uPB..., uPC..., uPD...等はそれぞれμA..., μPA..., μPB..., μPC..., μPD...を示します。

お願い
図面番号で部品を指定するときは基板名又はブロックを併せて指定してください。

⚠印の部品，または⚠印付の点線で囲まれた部品は，安全性を維持するために，重要な部品です。
従って交換時は，必ず指定の部品を使用してください。

注意
電池の交換は，正しく行わないと破裂する恐れがあります。
電池を交換する場合には必ず同じ型名の電池又は同等品と交換してください。
使用済み電池は，取扱指示に従って処分してください。

Note 1: イメージャの交換時は6-1ページの"イメージャ交換時の注意"を必ずお読みください。

Note 2: SY-1049基板のリチウム蓄電池（BT0200）を交換する場合はバッテリホルダ（BH0200）も同時に新品に交換してください。（一度使用したバッテリホルダは再使用できません。）部品取り付けの際は、先にバッテリホルダを取り付けてからリチウム蓄電池を装着してください。

2-2. ELECTRICAL PARTS LIST

Ref. No.	Part No.	Description
	1-889-592-11	AN-1006 FLEXIBLE BOARD **********
	A-2064-117-A	AN-1011 BOARD, COMPLETE **********
		< CAPACITOR >
C7381	1-117-730-81	CERAMIC CHIP 1.2PF 0.1PF 16V
		< CONTACT >
ET7381	1-780-992-11	TERMINAL (ON BOARD CONTACT)
		< JACK >
J7391	1-820-196-11	CONNECTOR, COAXIAL (SMT TYPE)
		< COIL >
L7383	1-481-448-11	INDUCTOR 7.5nH
	A-2071-012-A	CN-1032 BOARD, COMPLETE (SERVICE) **********
		< CAPACITOR >
* C202	1-116-720-11	CERAMIC CHIP 10uF 20% 6.3V
* C203	1-116-720-11	CERAMIC CHIP 10uF 20% 6.3V
C401	1-118-040-11	CERAMIC CHIP 2.2uF 10% 16V
C5300	1-118-462-11	CERAMIC CHIP 1uF 10% 10V
C5301	1-118-039-11	CERAMIC CHIP 1uF 10% 25V
* C7100	1-118-458-11	CERAMIC CHIP 0.1uF 10% 6.3V
* C7101	1-118-458-11	CERAMIC CHIP 0.1uF 10% 6.3V
		< CONNECTOR >
CN101	(Not supplied)	CONNECTOR, FPC (ZIF) 51P
CN7100	1-843-088-23	CARD CONNECTOR
		< DIODE >
D201	6-502-193-01	DIODE SML-D12V8WT86SN
		< IC >
IC5300	6-718-155-01	IC R1207N823B-TR-FE
		< COIL >
L401	1-456-501-11	INDUCTOR 33uH
		< RESISTOR >
R201	1-218-957-11	METAL CHIP 2.2K 5% 1/16W
R203	1-218-941-81	METAL CHIP 100 5% 1/16W
R208	1-218-990-81	SHORT CHIP 0
R209	1-218-990-81	SHORT CHIP 0
R210	1-218-990-81	SHORT CHIP 0
R211	1-218-990-81	SHORT CHIP 0
R5300	1-250-449-11	METAL CHIP 12 1% 1/16W
R5301	1-250-449-11	METAL CHIP 12 1% 1/16W
R7100	1-240-683-91	METAL CHIP 100 5% 1/20W
R7101	1-240-683-91	METAL CHIP 100 5% 1/20W

Ref. No.	Part No.	Description
		< COMPOSITION CIRCUIT BLOCK >
RB201	1-234-372-11	RES, NETWORK 100 (1005X4)
RB202	1-234-702-11	RES, NETWORK 68 (1005X4)
RB203	1-234-702-11	RES, NETWORK 68 (1005X4)
	A-2064-124-A	DL-1003 FLEXIBLE BOARD, COMPLETE **********
		< CAPACITOR >
* C001	1-116-738-11	CERAMIC CHIP 1uF 10% 6.3V
		< CONNECTOR >
CN001	1-816-654-61	FFC/FPC CONNECTOR (LIF) 6P
		< IC >
IC001	6-600-629-01	IC RS-470
		< PHOTO INTERRUPTER >
PH001	(Not supplied)	PHOTO REFLECTOR PR-40-T
PH002	(Not supplied)	PHOTO REFLECTOR PR-40-T
		< RESISTOR >
R007	1-216-823-11	METAL CHIP 1.5K 5% 1/10W
R008	1-216-823-11	METAL CHIP 1.5K 5% 1/10W
		< SWITCH >
S003	1-786-680-21	SWITCH, DETECTION (SMD)
	A-1974-836-A	ES-1001 FLEXIBLE BOARD, COMPLETE **********
		< CAPACITOR >
* C001	1-116-738-11	CERAMIC CHIP 1uF 10% 6.3V
		< RESISTOR >
R001	1-218-990-81	SHORT CHIP 0
		< SENSOR >
SE001	(Not supplied)	INFRARED RECEIVER SENSOR
	1-893-795-11	FP-2279 FLEXIBLE BOARD **********
	1-893-807-11	FP-2280 FLEXIBLE BOARD **********

Ref. No.	Part No.	Description			
	A-2064-121-A	GY-1007 BOARD, COMPLETE **********			
		< CAPACITOR >			
C201	1-118-480-11	CERAMIC CHIP	4.7uF	10%	6.3V
* C301	1-118-458-11	CERAMIC CHIP	0.1uF	10%	6.3V
C302	1-118-480-11	CERAMIC CHIP	4.7uF	10%	6.3V
C7701	(Not supplied)	CERAMIC CHIP	0.1uF	10%	6.3V
C7702	(Not supplied)	CERAMIC CHIP	0.1uF	10%	6.3V
C7703	(Not supplied)	CERAMIC CHIP	0.1uF	10%	6.3V
C7704	(Not supplied)	CERAMIC CHIP	0.1uF	10%	6.3V
		< CONNECTOR >			
* CN201	1-816-644-51	FFC/CONNECTOR, FPC (LIF) 12P			
		< RESISTOR >			
R201	1-218-990-81	SHORT CHIP	0		
R202	1-694-535-91	SHORT CHIP	0		
R203	1-694-535-91	SHORT CHIP	0		
R301	1-218-990-81	SHORT CHIP	0		
		< SENSOR >			
SE301	(Not supplied)	LIS221DLHTRSENSOR, ACCELERATION			
SE7701	(Not supplied)	SENSOR, ANGULAR VELOCITY (PITCH/YAW)			

Ref. No.	Part No.	Description			
	A-2064-122-A	GY-1008 BOARD, COMPLETE **********			
		< CAPACITOR >			
C001	1-118-480-11	CERAMIC CHIP	4.7uF	10%	6.3V
C7711	(Not supplied)	CERAMIC CHIP	0.33uF	10%	6.3V
C7712	1-116-713-11	CERAMIC CHIP	22uF	20%	10V
* C7713	1-118-033-11	CERAMIC CHIP	0.047uF	10%	10V
* C7714	1-118-033-11	CERAMIC CHIP	0.047uF	10%	10V
* C7715	1-118-458-11	CERAMIC CHIP	0.1uF	10%	6.3V
* C7717	1-118-458-11	CERAMIC CHIP	0.1uF	10%	6.3V
C7718	1-118-026-11	CERAMIC CHIP	470PF	10%	25V
* C7719	1-118-458-11	CERAMIC CHIP	0.1uF	10%	6.3V
		< CONNECTOR >			
CN001	1-816-654-61	FFC/FPC CONNECTOR (LIF) 6P			
		< IC >			
* IC7711	6-719-814-01	IC NJM3232MG2 (TE2)			
		< RESISTOR >			
R001	1-216-864-11	SHORT CHIP	0		
R7711	(Not supplied)	METAL CHIP	15K	1%	1/20W
R7712	(Not supplied)	METAL CHIP	150K	1%	1/20W
R7713	(Not supplied)	METAL CHIP	10K	1%	1/20W
R7714	(Not supplied)	METAL CHIP	22K	1%	1/20W
R7715	(Not supplied)	METAL CHIP	22K	1%	1/20W

Ref. No.	Part No.	Description			
		< SENSOR >			
SE7711	(Not supplied)	SENSOR, ANGULAR VELOCITY			
	A-2065-096-A	SERVICE, MECHA DEVICE (5000)			
	(Not supplied)	IS-1021 BOARD, COMPLETE **********			
	1-893-809-11	ISL-2002 FLEXIBLE BOARD **********			
	1-893-810-11	ISP-2003 FLEXIBLE BOARD **********			
	A-2071-013-A	JK-1012 BOARD, COMPLETE (SERVICE) **********			
		< CAPACITOR >			
C4907	1-118-389-11	CERAMIC CHIP	0.022uF	10%	25V
C4908	1-118-389-11	CERAMIC CHIP	0.022uF	10%	25V
		< CONNECTOR >			
* CN4901	1-843-618-11	CONNECTOR, FFC/FPC (LIF) 10P			
		< FERRITE BEAD >			
FB4900	1-481-262-21	FERRITE, EMI (SMD) (1005)			
FB4901	1-481-262-21	FERRITE, EMI (SMD) (1005)			
		< JACK >			
J4900	1-784-943-71	JACK (SMALL TYPE)			
J4901	1-784-943-51	JACK (SMALL TYPE)			
		< RESISTOR >			
R4900	1-218-990-81	SHORT CHIP	0		
R4901	1-218-990-81	SHORT CHIP	0		
R4906	1-218-990-81	SHORT CHIP	0		
R4907	1-218-990-81	SHORT CHIP	0		
	A-2064-120-A	LC-1023 BOARD, COMPLETE **********			
		< CAPACITOR >			
C048	1-118-040-11	CERAMIC CHIP	2.2uF	10%	16V
C052	1-118-480-11	CERAMIC CHIP	4.7uF	10%	6.3V
C057	1-116-734-11	CERAMIC CHIP	1uF	20%	16V
C058	1-116-734-11	CERAMIC CHIP	1uF	20%	16V
C060	1-116-729-11	CERAMIC CHIP	2.2uF	20%	10V
C061	1-116-729-11	CERAMIC CHIP	2.2uF	20%	10V
C063	1-118-040-11	CERAMIC CHIP	2.2uF	10%	16V
C064	1-118-040-11	CERAMIC CHIP	2.2uF	10%	16V
C065	1-118-040-11	CERAMIC CHIP	2.2uF	10%	16V
C066	1-116-734-11	CERAMIC CHIP	1uF	20%	16V

Ref. No.	Part No.	Description			
C067	1-116-734-11	CERAMIC CHIP	1uF	20%	16V
C068	1-116-734-11	CERAMIC CHIP	1uF	20%	16V
C069	1-116-734-11	CERAMIC CHIP	1uF	20%	16V
C070	1-116-734-11	CERAMIC CHIP	1uF	20%	16V
* C074	1-116-720-11	CERAMIC CHIP	10uF	20%	6.3V
* C076	1-116-720-11	CERAMIC CHIP	10uF	20%	6.3V
C082	1-118-041-11	CERAMIC CHIP	4.7uF	10%	10V
C085	1-118-040-11	CERAMIC CHIP	2.2uF	10%	16V
C086	1-118-040-11	CERAMIC CHIP	2.2uF	10%	16V
C087	1-118-041-11	CERAMIC CHIP	4.7uF	10%	10V
		< CONNECTOR >			
CN001	1-842-604-11	CONNECTOR, FPC (ZIF) 61PIN			
CN002	(Not supplied)	CONNECTOR, FPC (ZIF) 51P			
		< DIODE >			
* D001	6-503-578-01	DIODE RB520SM-30T2R			
* D002	6-503-578-01	DIODE RB520SM-30T2R			
		< RESISTOR >			
R096	1-218-990-81	SHORT CHIP	0		
R097	1-218-990-81	SHORT CHIP	0		
	1-893-988-11	LC-1024 FLEXIBLE BOARD **********			
	A-2070-916-A	MIS-2000 FLEXIBLE BOARD, COMPLETE **********			
		< CONNECTOR >			
CN7551	(Not supplied)	CONNECTOR (SHOE)			
	A-2071-014-A	RL-1037 FLEXIBLE BOARD, COMPLETE (SERVICE) **********			
		< CONNECTOR >			
CN001	1-816-655-61	FFC/CONNECTOR, FPC (LIF (NON-ZIF)) 8P			
CN002	1-816-654-61	FFC/FPC CONNECTOR (LIF) 6P			
* CN003	1-816-644-51	FFC/CONNECTOR, FPC (LIF) 12P			
CN004	1-794-375-21	PIN, CONNECTOR 2P			
		< DIODE >			
D001	6-502-887-01	DIODE SCM-J14DTT96			
		< PHOTO INTERRUPTER >			
PH001	(Not supplied)	PHOTO REFLECTOR PR-40-T			
PH002	(Not supplied)	PHOTO REFLECTOR PR-40-T			
		< RESISTOR >			
R003	1-218-957-11	METAL CHIP	2.2K	5%	1/16W
R004	1-218-959-11	METAL CHIP	3.3K	5%	1/16W
R005	1-218-961-11	METAL CHIP	4.7K	5%	1/16W
R006	1-218-965-11	METAL CHIP	10K	5%	1/16W
R011	1-218-965-11	METAL CHIP	10K	5%	1/16W

Ref. No.	Part No.	Description			
R012	1-218-961-11	METAL CHIP	4.7K	5%	1/16W
R013	1-218-959-11	METAL CHIP	3.3K	5%	1/16W
R014	1-218-957-11	METAL CHIP	2.2K	5%	1/16W
R016	1-216-815-11	METAL CHIP	330	5%	1/10W
R017	1-216-815-11	METAL CHIP	330	5%	1/10W
		< SWITCH >			
S001	1-786-680-21	SWITCH, DETECTION (SMD)			
S002	1-786-914-31	SWITCH, TACTILE			
* S003	1-786-914-51	SWITCH, TACTILE			
S006	1-786-914-31	SWITCH, TACTILE			
S007	1-786-914-31	SWITCH, TACTILE			
S008	1-798-035-61	ROTARY SWITCH			
S009	1-786-914-31	SWITCH, TACTILE			
		< THERMISTOR >			
⚠ TH001	1-804-949-11	THERMISTOR, NTC (SMD)			
	A-2064-126-A	SH-1014 FLEXIBLE BOARD, COMPLETE **********			
		< CONNECTOR >			
* CN001	1-822-378-11	CONNECTOR, FPC (ZIF) 33P			
		< SWITCH >			
S001	1-786-914-31	SWITCH, TACTILE			
	A-2065-816-A	SY-1049 BOARD, COMPLETE (SERVICE) **********			
		< BATTERY HOLDER >			
⚠ BH0200	1-251-928-21	SOCKET, BATTERY			
		< BATTERY>			
⚠ BT0200	1-756-134-15	BATTERY, LITHIUM (SECONDARY)			
		< CAPACITOR >			
C0105	1-118-462-11	CERAMIC CHIP	1uF	10%	10V
C0106	1-118-462-11	CERAMIC CHIP	1uF	10%	10V
C0114	1-118-462-11	CERAMIC CHIP	1uF	10%	10V
C0115	1-118-462-11	CERAMIC CHIP	1uF	10%	10V
C0117	1-116-713-11	CERAMIC CHIP	22uF	20%	10V
C0200	(Not supplied)	CERAMIC CHIP	0.01uF	10%	16V
C0414	1-118-386-11	CERAMIC CHIP	0.1uF	10%	16V
* C0415	1-116-738-11	CERAMIC CHIP	1uF	10%	6.3V
C0417	1-118-386-11	CERAMIC CHIP	0.1uF	10%	16V
C0420	(Not supplied)	CERAMIC CHIP	0.022uF	10%	10V
C0600	(Not supplied)	CERAMIC CHIP	0.001uF	10%	25V
C0702	1-100-249-11	CAP, CERAMIC	0.01MF B (1310)		
* C0703	1-118-458-11	CERAMIC CHIP	0.1uF	10%	6.3V
C0704	(Not supplied)	CERAMIC CHIP	0.01uF	10%	16V
* C0706	1-118-458-11	CERAMIC CHIP	0.1uF	10%	6.3V
C1009	(Not supplied)	CERAMIC CHIP	0.1uF	10%	6.3V
C1106	(Not supplied)	CERAMIC CHIP	0.1uF	10%	10V

Ref. No.	Part No.	Description			
C1108	1-100-252-11	CAP, CERAMIC	0.1MF B (1310)		
C1121	(Not supplied)	CERAMIC CHIP	0.1uF	10%	10V
C1122	(Not supplied)	CERAMIC CHIP	0.1uF	10%	6.3V
C1123	(Not supplied)	CERAMIC CHIP	0.1uF	10%	10V
* C1124	1-116-720-11	CERAMIC CHIP	10uF	20%	6.3V
* C1501	1-118-458-11	CERAMIC CHIP	0.1uF	10%	6.3V
* C1502	1-118-458-11	CERAMIC CHIP	0.1uF	10%	6.3V
* C1504	1-118-458-11	CERAMIC CHIP	0.1uF	10%	6.3V
C1505	1-114-176-21	TANTAL. CHIP	47uF	20%	10V
* C1513	1-116-738-11	CERAMIC CHIP	1uF	10%	6.3V
* C1514	1-116-738-11	CERAMIC CHIP	1uF	10%	6.3V
C1522	(Not supplied)	CERAMIC CHIP	0.047uF	10%	6.3V
C1523	(Not supplied)	CERAMIC CHIP	0.047uF	10%	6.3V
C1524	(Not supplied)	CERAMIC CHIP	0.047uF	10%	6.3V
C1525	(Not supplied)	CERAMIC CHIP	0.047uF	10%	6.3V
C1528	(Not supplied)	CERAMIC CHIP	0.047uF	10%	6.3V
C1529	(Not supplied)	CERAMIC CHIP	0.047uF	10%	6.3V
C1533	1-118-477-11	CERAMIC CHIP	2.2uF	10%	6.3V
* C1536	1-116-738-11	CERAMIC CHIP	1uF	10%	6.3V
* C1537	1-116-738-11	CERAMIC CHIP	1uF	10%	6.3V
C1700	(Not supplied)	CERAMIC CHIP	0.001uF	10%	25V
C2305	(Not supplied)	CERAMIC CHIP	0.1uF	10%	6.3V
C2306	1-118-462-11	CERAMIC CHIP	1uF	10%	10V
C3000	(Not supplied)	CERAMIC CHIP	2.2uF	10%	16V
C3001	1-118-417-11	CERAMIC CHIP	0.1uF	10%	16V
* C3008	1-116-720-11	CERAMIC CHIP	10uF	20%	6.3V
C3009	(Not supplied)	CERAMIC CHIP	0.1uF	10%	6.3V
C3012	1-118-417-11	CERAMIC CHIP	0.1uF	10%	16V
C3402	1-118-168-11	CERAMIC CHIP	1uF	20%	6.3V
* C3403	1-116-738-11	CERAMIC CHIP	1uF	10%	6.3V
* C3800	1-118-458-11	CERAMIC CHIP	0.1uF	10%	6.3V
C3801	1-116-713-11	CERAMIC CHIP	22uF	20%	10V
* C4800	1-116-720-11	CERAMIC CHIP	10uF	20%	6.3V
C4904	(Not supplied)	CERAMIC CHIP	0.001uF	10%	25V
C5100	1-118-462-11	CERAMIC CHIP	1uF	10%	10V
C5101	1-118-386-11	CERAMIC CHIP	0.1uF	10%	16V
C5102	(Not supplied)	CERAMIC CHIP	0.01uF	10%	16V
C5103	1-118-039-11	CERAMIC CHIP	1uF	10%	25V
C5104	1-118-462-11	CERAMIC CHIP	1uF	10%	10V
C5105	1-118-462-11	CERAMIC CHIP	1uF	10%	10V
C5106	1-118-462-11	CERAMIC CHIP	1uF	10%	10V
* C5107	1-118-035-11	CERAMIC CHIP	0.1uF	10%	25V
C5108	1-118-477-11	CERAMIC CHIP	2.2uF	10%	6.3V
C5109	1-118-477-11	CERAMIC CHIP	2.2uF	10%	6.3V
C5110	1-118-040-11	CERAMIC CHIP	2.2uF	10%	16V
C5111	1-118-040-11	CERAMIC CHIP	2.2uF	10%	16V
C5112	1-118-040-11	CERAMIC CHIP	2.2uF	10%	16V
C5114	1-118-040-11	CERAMIC CHIP	2.2uF	10%	16V
C5116	1-116-749-11	CERAMIC CHIP	22uF	20%	6.3V
* C5117	1-116-720-11	CERAMIC CHIP	10uF	20%	6.3V
* C5118	1-116-720-11	CERAMIC CHIP	10uF	20%	6.3V
* C5120	1-116-720-11	CERAMIC CHIP	10uF	20%	6.3V
C5150	1-116-713-11	CERAMIC CHIP	22uF	20%	10V
C5151	1-116-713-11	CERAMIC CHIP	22uF	20%	10V
C5152	1-116-713-11	CERAMIC CHIP	22uF	20%	10V
C5153	1-116-713-11	CERAMIC CHIP	22uF	20%	10V
C5154	1-118-386-11	CERAMIC CHIP	0.1uF	10%	16V
C5155	1-118-386-11	CERAMIC CHIP	0.1uF	10%	16V

Ref. No.	Part No.	Description			
C5156	(Not supplied)	CERAMIC CHIP	10PF	5%	50V
C5157	(Not supplied)	CERAMIC CHIP	10PF	5%	50V
C5158	1-116-713-11	CERAMIC CHIP	22uF	20%	10V
C5159	1-116-713-11	CERAMIC CHIP	22uF	20%	10V
* C5200	1-118-458-11	CERAMIC CHIP	0.1uF	10%	6.3V
C5201	1-118-041-11	CERAMIC CHIP	4.7uF	10%	10V
* C5202	1-118-458-11	CERAMIC CHIP	0.1uF	10%	6.3V
* C5203	1-116-738-11	CERAMIC CHIP	1uF	10%	6.3V
C5204	1-118-462-11	CERAMIC CHIP	1uF	10%	10V
C5205	1-118-462-11	CERAMIC CHIP	1uF	10%	10V
* C5206	1-118-458-11	CERAMIC CHIP	0.1uF	10%	6.3V
C5207	1-118-269-11	CERAMIC CHIP	4.7uF	20%	6.3V
C5208	1-118-462-11	CERAMIC CHIP	1uF	10%	10V
C5209	1-118-462-11	CERAMIC CHIP	1uF	10%	10V
C5250	1-116-744-11	CERAMIC CHIP	0.22uF	10%	10V
C5253	(Not supplied)	CERAMIC CHIP	0.01uF	10%	16V
C5254	(Not supplied)	CERAMIC CHIP	0.1uF	10%	10V
* C5325	1-118-458-11	CERAMIC CHIP	0.1uF	10%	6.3V
C5326	1-118-386-11	CERAMIC CHIP	0.1uF	10%	16V
* C5327	1-118-458-11	CERAMIC CHIP	0.1uF	10%	6.3V
C5328	1-118-041-11	CERAMIC CHIP	4.7uF	10%	10V
C5329	1-118-040-11	CERAMIC CHIP	2.2uF	10%	16V
C5500	1-118-462-11	CERAMIC CHIP	1uF	10%	10V
C5650	1-118-039-11	CERAMIC CHIP	1uF	10%	25V
C5651	(Not supplied)	CERAMIC CHIP	0.22uF	10%	6.3V
C5652	(Not supplied)	CERAMIC CHIP	0.1uF	10%	10V
C5653	1-118-040-11	CERAMIC CHIP	2.2uF	10%	16V
C5654	1-118-047-11	CERAMIC CHIP	10uF	10%	16V
C5655	1-118-047-11	CERAMIC CHIP	10uF	10%	16V
C5656	1-118-039-11	CERAMIC CHIP	1uF	10%	25V
C5657	1-118-039-11	CERAMIC CHIP	1uF	10%	25V
C5658	1-118-386-11	CERAMIC CHIP	0.1uF	10%	16V
C5659	(Not supplied)	CERAMIC CHIP	0.0047uF	10%	16V
C5700	1-116-713-11	CERAMIC CHIP	22uF	20%	10V
* C5704	1-118-458-11	CERAMIC CHIP	0.1uF	10%	6.3V
C5705	1-118-480-11	CERAMIC CHIP	4.7uF	10%	6.3V
C5707	(Not supplied)	CERAMIC CHIP	15PF	5%	50V
C5708	1-118-477-11	CERAMIC CHIP	2.2uF	10%	6.3V
C5709	(Not supplied)	CERAMIC CHIP	15PF	5%	50V
C5710	(Not supplied)	CERAMIC CHIP	12PF	5%	50V
C5711	(Not supplied)	CERAMIC CHIP	12PF	5%	50V
* C5712	1-118-458-11	CERAMIC CHIP	0.1uF	10%	6.3V
* C5714	1-118-458-11	CERAMIC CHIP	0.1uF	10%	6.3V
C5715	(Not supplied)	CERAMIC CHIP	0.1uF	10%	10V
C6003	1-116-732-11	CERAMIC CHIP	2.2uF	20%	6.3V
* C6004	1-118-458-11	CERAMIC CHIP	0.1uF	10%	6.3V
* C6005	1-118-458-11	CERAMIC CHIP	0.1uF	10%	6.3V
* C6008	1-118-458-11	CERAMIC CHIP	0.1uF	10%	6.3V
* C6009	1-118-458-11	CERAMIC CHIP	0.1uF	10%	6.3V
* C6010	1-118-458-11	CERAMIC CHIP	0.1uF	10%	6.3V
* C6041	1-118-458-11	CERAMIC CHIP	0.1uF	10%	6.3V
C6060	1-116-732-11	CERAMIC CHIP	2.2uF	20%	6.3V
* C6062	1-118-458-11	CERAMIC CHIP	0.1uF	10%	6.3V
* C6063	1-118-458-11	CERAMIC CHIP	0.1uF	10%	6.3V
C6065	1-116-732-11	CERAMIC CHIP	2.2uF	20%	6.3V
* C6067	1-118-458-11	CERAMIC CHIP	0.1uF	10%	6.3V
* C6080	1-118-458-11	CERAMIC CHIP	0.1uF	10%	6.3V
* C6081	1-118-458-11	CERAMIC CHIP	0.1uF	10%	6.3V
* C6084	1-118-458-11	CERAMIC CHIP	0.1uF	10%	6.3V

Ref. No.	Part No.	Description			
* C6086	1-118-458-11	CERAMIC CHIP	0.1uF	10%	6.3V
* C6100	1-116-720-11	CERAMIC CHIP	10uF	20%	6.3V
* C6103	1-118-458-11	CERAMIC CHIP	0.1uF	10%	6.3V
* C6104	1-118-458-11	CERAMIC CHIP	0.1uF	10%	6.3V
* C6127	1-118-458-11	CERAMIC CHIP	0.1uF	10%	6.3V
* C6128	1-118-458-11	CERAMIC CHIP	0.1uF	10%	6.3V
C6129	1-118-168-11	CERAMIC CHIP	1uF	20%	6.3V
* C6130	1-118-458-11	CERAMIC CHIP	0.1uF	10%	6.3V
* C6131	1-118-458-11	CERAMIC CHIP	0.1uF	10%	6.3V
* C6132	1-118-458-11	CERAMIC CHIP	0.1uF	10%	6.3V
* C6133	1-118-458-11	CERAMIC CHIP	0.1uF	10%	6.3V
* C6134	1-118-458-11	CERAMIC CHIP	0.1uF	10%	6.3V
C6141	1-116-713-11	CERAMIC CHIP	22uF	20%	10V
* C6142	1-118-458-11	CERAMIC CHIP	0.1uF	10%	6.3V
C6200	1-116-749-11	CERAMIC CHIP	22uF	20%	6.3V
C6201	1-116-749-11	CERAMIC CHIP	22uF	20%	6.3V
* C6203	1-118-458-11	CERAMIC CHIP	0.1uF	10%	6.3V
* C6204	1-118-458-11	CERAMIC CHIP	0.1uF	10%	6.3V
* C6205	1-118-458-11	CERAMIC CHIP	0.1uF	10%	6.3V
* C6206	1-118-458-11	CERAMIC CHIP	0.1uF	10%	6.3V
C6207	(Not supplied)	CERAMIC CHIP	0.01uF	10%	16V
C6208	(Not supplied)	CERAMIC CHIP	0.01uF	10%	16V
C6209	(Not supplied)	CERAMIC CHIP	0.01uF	10%	16V
C6210	(Not supplied)	CERAMIC CHIP	0.01uF	10%	16V
C6220	(Not supplied)	CERAMIC CHIP	10uF	20%	6.3V
C6221	(Not supplied)	CERAMIC CHIP	10uF	20%	6.3V
* C6222	1-118-458-11	CERAMIC CHIP	0.1uF	10%	6.3V
* C6223	1-118-458-11	CERAMIC CHIP	0.1uF	10%	6.3V
* C6224	1-118-458-11	CERAMIC CHIP	0.1uF	10%	6.3V
* C6225	1-118-458-11	CERAMIC CHIP	0.1uF	10%	6.3V
* C6227	1-118-458-11	CERAMIC CHIP	0.1uF	10%	6.3V
* C6228	1-118-458-11	CERAMIC CHIP	0.1uF	10%	6.3V
* C6229	1-118-458-11	CERAMIC CHIP	0.1uF	10%	6.3V
C6230	(Not supplied)	CERAMIC CHIP	0.01uF	10%	16V
C6235	(Not supplied)	CERAMIC CHIP	0.01uF	10%	16V
C6236	(Not supplied)	CERAMIC CHIP	0.01uF	10%	16V
C6240	(Not supplied)	CERAMIC CHIP	0.01uF	10%	16V
C6241	(Not supplied)	CERAMIC CHIP	0.01uF	10%	16V
C6242	(Not supplied)	CERAMIC CHIP	0.01uF	10%	16V
* C6243	1-118-458-11	CERAMIC CHIP	0.1uF	10%	6.3V
* C6244	1-118-458-11	CERAMIC CHIP	0.1uF	10%	6.3V
* C6245	1-118-458-11	CERAMIC CHIP	0.1uF	10%	6.3V
C6700	1-118-041-11	CERAMIC CHIP	4.7uF	10%	10V
C6701	(Not supplied)	CERAMIC CHIP	0.1uF	10%	10V
C6702	(Not supplied)	CERAMIC CHIP	0.001uF	10%	25V
C6703	1-118-386-11	CERAMIC CHIP	0.1uF	10%	16V
* C6760	1-118-458-11	CERAMIC CHIP	0.1uF	10%	6.3V
C6761	1-118-462-11	CERAMIC CHIP	1uF	10%	10V
C7301	1-118-477-11	CERAMIC CHIP	2.2uF	10%	6.3V
C7302	1-118-477-11	CERAMIC CHIP	2.2uF	10%	6.3V
C7303	1-118-477-11	CERAMIC CHIP	2.2uF	10%	6.3V
C7304	1-118-477-11	CERAMIC CHIP	2.2uF	10%	6.3V
C7305	1-118-477-11	CERAMIC CHIP	2.2uF	10%	6.3V
* C7401	1-118-458-11	CERAMIC CHIP	0.1uF	10%	6.3V
C7402	(Not supplied)	CERAMIC CHIP	47PF	1%	50V
C7403	(Not supplied)	CERAMIC CHIP	47PF	1%	50V
C7404	(Not supplied)	CERAMIC CHIP	1PF	10%	50V
C7731	1-118-269-11	CERAMIC CHIP	4.7uF	20%	6.3V

Ref. No.	Part No.	Description			
* C7732	1-118-458-11	CERAMIC CHIP	0.1uF	10%	6.3V
* C7733	1-118-458-11	CERAMIC CHIP	0.1uF	10%	6.3V
* C8060	1-118-035-11	CERAMIC CHIP	0.1uF	10%	25V
* C8061	1-118-035-11	CERAMIC CHIP	0.1uF	10%	25V
* C8062	1-118-035-11	CERAMIC CHIP	0.1uF	10%	25V
C8063	1-118-386-11	CERAMIC CHIP	0.1uF	10%	16V
C8064	1-118-386-11	CERAMIC CHIP	0.1uF	10%	16V
C8065	1-118-386-11	CERAMIC CHIP	0.1uF	10%	16V
C8500	1-118-462-11	CERAMIC CHIP	1uF	10%	10V
C8501	1-118-462-11	CERAMIC CHIP	1uF	10%	10V
* C8503	1-118-458-11	CERAMIC CHIP	0.1uF	10%	6.3V
* C8504	1-118-458-11	CERAMIC CHIP	0.1uF	10%	6.3V
C8505	1-118-462-11	CERAMIC CHIP	1uF	10%	10V
C8506	1-118-462-11	CERAMIC CHIP	1uF	10%	10V
* C8507	1-118-458-11	CERAMIC CHIP	0.1uF	10%	6.3V
* C8508	1-118-458-11	CERAMIC CHIP	0.1uF	10%	6.3V
C8509	(Not supplied)	CERAMIC CHIP	0.001uF	10%	25V
C8510	(Not supplied)	CERAMIC CHIP	0.001uF	10%	25V
C8511	(Not supplied)	CERAMIC CHIP	0.001uF	10%	25V
C8512	(Not supplied)	CERAMIC CHIP	0.001uF	10%	25V
C8513	(Not supplied)	CERAMIC CHIP	0.001uF	10%	25V
C8514	(Not supplied)	CERAMIC CHIP	0.001uF	10%	25V
C8515	1-118-462-11	CERAMIC CHIP	1uF	10%	10V
C8516	1-118-462-11	CERAMIC CHIP	1uF	10%	10V
C8517	1-118-462-11	CERAMIC CHIP	1uF	10%	10V
C8518	1-118-462-11	CERAMIC CHIP	1uF	10%	10V
* C8519	1-118-458-11	CERAMIC CHIP	0.1uF	10%	6.3V
C8520	1-118-462-11	CERAMIC CHIP	1uF	10%	10V
C8521	1-116-717-11	CERAMIC CHIP	10uF	20%	10V
C8522	1-116-729-11	CERAMIC CHIP	2.2uF	20%	10V
C8523	1-116-729-11	CERAMIC CHIP	2.2uF	20%	10V
C8524	(Not supplied)	CERAMIC CHIP	0.0047uF	10%	6.3V
C8525	1-118-026-11	CERAMIC CHIP	470PF	10%	25V
* C8526	1-118-458-11	CERAMIC CHIP	0.1uF	10%	6.3V
* C8527	1-118-458-11	CERAMIC CHIP	0.1uF	10%	6.3V
C8800	1-118-462-11	CERAMIC CHIP	1uF	10%	10V
		< CONNECTOR >			
CN0400	1-822-769-21	CONNECTOR, FPC (ZIF) 27P			
* CN0401	1-821-503-11	CONNECTOR, FPC (ZIF) 39P			
CN1501	1-843-623-11	CONNECTOR, FFC/FPC (LIF) 20P			
CN1700	1-822-220-71	CONNECTOR, FPC (LIF (NON-ZIF))			
CN1800	1-822-220-71	CONNECTOR, FPC (LIF (NON-ZIF))			
* CN1802	1-843-618-11	CONNECTOR, FFC/FPC (LIF) 10P			
CN3000	(Not supplied)	CONNECTOR, FPC (ZIF) 51P			
CN4001	(Not supplied)	SOCKET, USB CONNECTOR			
* CN4800	1-843-618-11	CONNECTOR, FFC/FPC (LIF) 10P			
CN4801	1-816-654-61	FFC/FPC CONNECTOR (LIF) 6P			
* CN4909	1-821-503-11	CONNECTOR, FPC (ZIF) 39P			
* CN4910	1-821-503-11	CONNECTOR, FPC (ZIF) 39P			
CN4911	1-843-469-11	CONNECTOR, FPC (ZIF) 61P			
CN4912	(Not supplied)	CONNECTOR, FPC (ZIF) 51P			
* CN8060	1-842-176-51	CONNECTOR, FPC (ZIF) 61P			
CN9000	(Not supplied)	CONNECTOR, HDMI (TYPE-D)			
		< COMPOSITION CIRCUIT BLOCK >			
CP7301	(Not supplied)	WLAN MODULE			

Ref. No.	Part No.	Description
		< DIODE >
D0100	8-719-024-71	DIODE 1SS362-TE85L
D0400	6-502-934-01	DIODE DB2S31100K8
* D0601	6-501-573-01	DIODE CL-271TLY-C-TS
* D0700	6-503-578-01	DIODE RB520SM-30T2R
D0701	6-503-126-01	DIODE DA2S10100K8
D1100	6-503-126-01	DIODE DA2S10100K8
D1101	6-503-126-01	DIODE DA2S10100K8
D4903	6-503-321-01	DIODE DZ5S068D0R
D4904	6-503-321-01	DIODE DZ5S068D0R
D4906	6-503-321-01	DIODE DZ5S068D0R
D4909	6-503-126-01	DIODE DA2S10100K8
D4910	6-503-126-01	DIODE DA2S10100K8
D5320	6-503-737-01	DIODE CES520
D5321	6-503-737-01	DIODE CES520
* D6700	6-503-578-01	DIODE RB520SM-30T2R
D6701	6-503-321-01	DIODE DZ5S068D0R
D6702	6-503-321-01	DIODE DZ5S068D0R
D6780	6-503-031-01	DIODE DZ2J18000L
D6781	6-502-975-01	DIODE DZ2J15000L
D8800	6-503-126-01	DIODE DA2S10100K8
* D9000	6-502-988-01	DIODE RB480Y-40T2R
		< FUSE >
⚠ F0002	1-523-420-11	FUSE (3A/24V)
⚠ F0003	1-523-420-11	FUSE (3A/24V)
⚠ F0004	1-523-209-11	FUSE (0.25A/32V)
⚠ F0005	1-523-372-11	FUSE (1.6A/24V)
⚠ F0006	1-523-372-11	FUSE (1.6A/24V)
⚠ F0008	1-523-374-11	FUSE (2.5A/24V)
		< FERRITE BEAD >
FB0600	1-481-349-21	EMI FERRITE (SMD) (1608)
* FB1000	1-481-250-11	INDUCTOR, FERRITE BEAD (1005)
FB3000	(Not supplied)	FERRITE, EMI (SMD)(0603)
FB3001	(Not supplied)	FERRITE, EMI (SMD)(0603)
FB3002	(Not supplied)	FERRITE, EMI (SMD)(0603)
FB3003	(Not supplied)	FERRITE, EMI (SMD)(0603)
FB3004	(Not supplied)	FERRITE, EMI (SMD)(0603)
FB3005	(Not supplied)	FERRITE, EMI (SMD)(0603)
FB3006	(Not supplied)	FERRITE, EMI (SMD)(0603)
FB3007	(Not supplied)	FERRITE, EMI (SMD)(0603)
FB3008	(Not supplied)	FERRITE, EMI (SMD)(0603)
FB3009	(Not supplied)	FERRITE, EMI (SMD)(0603)
FB3010	(Not supplied)	FERRITE, EMI (SMD)(0603)
FB3011	(Not supplied)	FERRITE, EMI (SMD)(0603)
FB3012	(Not supplied)	FERRITE, EMI (SMD)(0603)
FB3013	(Not supplied)	FERRITE, EMI (SMD)(0603)
FB3014	(Not supplied)	FERRITE, EMI (SMD)(0603)
FB3015	(Not supplied)	FERRITE, EMI (SMD)(0603)
FB3016	(Not supplied)	FERRITE, EMI (SMD)(0603)
FB3017	(Not supplied)	FERRITE, EMI (SMD)(0603)
FB3018	(Not supplied)	FERRITE, EMI (SMD)(0603)
FB3019	(Not supplied)	FERRITE, EMI (SMD)(0603)
FB3020	(Not supplied)	FERRITE, EMI (SMD)(0603)
FB3021	(Not supplied)	FERRITE, EMI (SMD)(0603)
FB3022	(Not supplied)	FERRITE, EMI (SMD)(0603)

Ref. No.	Part No.	Description
FB3023	(Not supplied)	FERRITE, EMI (SMD)(0603)
FB6060	1-469-580-21	INDUCTOR, FERRITE BEAD (1005)
FB6240	1-481-912-21	EMI FERRITE (SMD) (1005)
FB6241	1-481-912-21	EMI FERRITE (SMD) (1005)
		< IC >
IC0102	(Not supplied)	IC MM3413A50PRE
IC1501	6-716-760-01	IC R2J30503LG
* IC1502	6-719-361-01	IC MM3416A28URE
IC2300	(Not supplied)	IC MM3416A33URE
IC2301	(Not supplied)	IC TCK107G
IC3801	8-759-598-43	IC TC7WH04FK
IC3802	8-759-831-52	IC TC7WH125FK
IC5100	(Not supplied)	IC BD8336GU-E2
IC5150	(Not supplied)	IC TPS63060DSCR
IC5151	(Not supplied)	IC TPS63060DSCR
IC5200	6-716-945-01	IC BD8331GU-E2
IC5250	6-715-773-01	IC NJM12904RB1 (TE2)
* IC5321	6-720-977-01	IC TPS61093DSKR
IC5500	6-717-848-01	IC NCP380HSNAJAAT1G
IC5600	6-716-783-01	IC BD11600NUX-E2
* IC5651	6-720-759-01	IC OZ8072PN-C5-0-TR
* IC5700	6-720-757-01	IC MB9AF004BGL-G-103-ERE1
IC6000	(Not supplied)	IC MCZ4G8G11D
IC6200	(Not supplied)	IC CXD90027GF
IC6701	6-711-178-01	IC TC74VHC125FK (EL, K)
IC6702	6-710-786-01	IC TC7SH125FU
IC6760	6-706-491-01	IC TC7SH86FU
* IC7401	6-715-114-01	IC CXD9950AK
* IC8500	6-719-793-01	IC AK4695ECB-L
* IC8501	6-719-207-01	IC MM3411A28URE
		< JACK >
J7381	1-820-196-11	CONNECTOR, COAXIAL (SMT TYPE)
		< COIL >
L0101	1-481-926-11	INDUCTOR 2.2uH
L0102	(Not supplied)	INDUCTOR 10uH
L0103	1-460-473-11	INDUCTOR 4.7uH
L0105	1-460-473-11	INDUCTOR 4.7uH
L0111	1-469-844-11	INDUCTOR 2.2uH
L5150	(Not supplied)	INDUCTOR 1uH
L5151	(Not supplied)	INDUCTOR 1uH
L5320	1-460-578-21	INDUCTOR 10uH
L5650	1-460-358-11	INDUCTOR 2.2uH
* L6220	1-400-411-21	INDUCTOR 4.7uH
* L6221	1-400-411-21	INDUCTOR 4.7uH
L9000	(Not supplied)	COMMON MODE CHOKE COIL15(0806)
L9001	(Not supplied)	COMMON MODE CHOKE COIL15(0806)
L9002	(Not supplied)	COMMON MODE CHOKE COIL15(0806)
L9003	(Not supplied)	COMMON MODE CHOKE COIL15(0806)
		< TRANSISTOR >
Q0400	6-552-845-01	TRANSISTOR SSM3K121TU, LSOYF
Q0401	8-729-053-58	TRANSISTOR RN1904FE
Q0403	6-551-631-01	TRANSISTOR RN1104MFV (TL3S
Q0404	6-552-398-01	TRANSISTOR FJ3303010L
* Q0405	6-552-700-01	TRANSISTOR SSM3K15AMFV, L3SF
Q0406	6-551-622-01	TRANSISTOR 2SC6026MFV (TL3S

Ref. No.	Part No.	Description
* Q0407	6-552-523-01	TRANSISTOR DMA904010R
Q0502	6-551-630-01	TRANSISTOR RN1102MFV (TL3S
Q0503	6-552-874-01	TRANSISTOR RW1C025ZPT2CR
Q0600	6-552-842-01	TRANSISTOR QS8J2FU7TR
Q0601	6-551-630-01	TRANSISTOR RN1102MFV (TL3S
Q0700	6-551-345-01	TRANSISTOR SSM6L16FE (TPLR3)
Q3800	8-729-053-57	TRANSISTOR RN1902FE
* Q4800	6-552-700-01	TRANSISTOR SSM3K15AMFV, L3SF
* Q4906	6-551-861-01	TRANSISTOR 2SC4505T100
Q4907	8-729-053-58	TRANSISTOR RN1904FE
Q5250	6-551-631-01	TRANSISTOR RN1104MFV (TL3S
Q5252	(Not supplied)	TRANSISTOR SSM6J412TU, RSOYF
Q5322	8-729-053-52	TRANSISTOR HN1C01FE
* Q5323	6-551-623-01	TRANSISTOR 2SA2154MFV (TL3S
* Q5520	6-552-213-01	TRANSISTOR RW1A020ZPFU7
Q5521	6-551-631-01	TRANSISTOR RN1104MFV (TL3S
Q5541	8-729-055-01	TRANSISTOR RN4984FE
Q5600	6-551-631-01	TRANSISTOR RN1104MFV (TL3S
Q5700	6-553-024-01	TRANSISTOR SCH1337-TL-H
Q5701	6-551-630-01	TRANSISTOR RN1102MFV (TL3S
Q5702	6-553-038-01	TRANSISTOR DRA3115T0L
Q6700	6-552-842-01	TRANSISTOR QS8J2FU7TR
Q6703	6-552-830-01	TRANSISTOR SSM6N15AFE
Q6704	6-552-830-01	TRANSISTOR SSM6N15AFE
Q6705	6-552-830-01	TRANSISTOR SSM6N15AFE
Q6706	6-550-576-01	TRANSISTOR SSM6E01TU
Q6760	6-551-630-01	TRANSISTOR RN1102MFV (TL3S
Q6761	6-552-883-01	TRANSISTOR US6M2GTR
Q6780	6-551-630-01	TRANSISTOR RN1102MFV (TL3S
Q6782	(Not supplied)	TRANSISTOR MTM765200LBF
Q7890	8-729-013-22	TRANSISTOR HN1A01FU
Q7891	6-551-630-01	TRANSISTOR RN1102MFV (TL3S
Q8800	6-551-631-01	TRANSISTOR RN1104MFV (TL3S
Q8801	6-552-874-01	TRANSISTOR RW1C025ZPT2CR
Q9000	6-551-202-01	TRANSISTOR LM6K1FS8T2R
* Q9001	6-552-700-01	TRANSISTOR SSM3K15AMFV, L3SF
Q9002	8-729-055-01	TRANSISTOR RN4984FE
		< RESISTOR >
R0400	1-218-953-11	METAL CHIP 1K 5% 1/16W
R0401	1-218-937-11	METAL CHIP 47 5% 1/16W
R0407	1-218-981-81	METAL CHIP 220K 5% 1/16W
R0408	1-218-977-11	METAL CHIP 100K 5% 1/16W
R0409	1-218-933-11	METAL CHIP 22 5% 1/16W
R0410	1-218-961-11	METAL CHIP 4.7K 5% 1/16W
R0411	1-218-977-11	METAL CHIP 100K 5% 1/16W
R0414	1-218-965-11	METAL CHIP 10K 5% 1/16W
R0415	1-218-969-11	METAL CHIP 22K 5% 1/16W
R0416	1-250-530-11	METAL CHIP 30K 1% 1/16W
* R0418	1-250-538-11	METAL CHIP 62K 1% 1/16W
R0420	1-216-295-91	SHORT CHIP 0
R0503	1-240-718-91	METAL CHIP 100K 5% 1/20W
R0504	1-218-953-11	METAL CHIP 1K 5% 1/16W
R0602	1-218-957-11	METAL CHIP 2.2K 5% 1/16W
R0703	1-240-718-91	METAL CHIP 100K 5% 1/20W
R0705	1-218-941-81	METAL CHIP 100 5% 1/16W
R0706	1-218-945-11	METAL CHIP 220 5% 1/16W
R0707	1-218-941-81	METAL CHIP 100 5% 1/16W
* R0715	1-250-511-11	METAL CHIP 4.7K 1% 1/16W

Ref. No.	Part No.	Description
R0717	1-218-977-11	METAL CHIP 100K 5% 1/16W
R0726	1-218-973-11	METAL CHIP 47K 5% 1/16W
R0728	1-218-973-11	METAL CHIP 47K 5% 1/16W
R1016	1-218-945-11	METAL CHIP 220 5% 1/16W
R1126	1-218-945-11	METAL CHIP 220 5% 1/16W
R1129	(Not supplied)	METAL CHIP 100K 1% 1/20W
R1130	(Not supplied)	METAL CHIP 4.7K 1% 1/20W
R1131	(Not supplied)	METAL CHIP 4.7K 1% 1/20W
* R1136	1-250-523-11	METAL CHIP 15K 1% 1/16W
R1138	1-240-691-91	METAL CHIP 470 5% 1/20W
R1139	1-240-691-91	METAL CHIP 470 5% 1/20W
R1140	(Not supplied)	METAL CHIP 47K 1% 1/20W
R1141	1-240-707-91	METAL CHIP 10K 5% 1/20W
R1214	1-218-937-11	METAL CHIP 47 5% 1/16W
R1510	1-208-711-11	METAL CHIP 15K 0.5% 1/16W
R1541	1-218-977-11	METAL CHIP 100K 5% 1/16W
R1542	1-218-977-11	METAL CHIP 100K 5% 1/16W
R1543	1-218-957-11	METAL CHIP 2.2K 5% 1/16W
R1544	1-218-957-11	METAL CHIP 2.2K 5% 1/16W
R1545	1-218-990-81	SHORT CHIP 0
R2302	1-218-990-81	SHORT CHIP 0
R3010	1-218-941-81	METAL CHIP 100 5% 1/16W
R3011	1-218-943-11	METAL CHIP 150 5% 1/16W
R3012	1-218-943-11	METAL CHIP 150 5% 1/16W
R3800	1-240-701-91	METAL CHIP 3.3K 5% 1/20W
R4800	1-218-953-11	METAL CHIP 1K 5% 1/16W
R4801	1-218-977-11	METAL CHIP 100K 5% 1/16W
R4950	1-240-707-91	METAL CHIP 10K 5% 1/20W
R4951	1-240-714-91	METAL CHIP 47K 5% 1/20W
R4955	1-218-957-11	METAL CHIP 2.2K 5% 1/16W
R4956	1-218-959-11	METAL CHIP 3.3K 5% 1/16W
R4957	1-218-961-11	METAL CHIP 4.7K 5% 1/16W
R4958	1-218-965-11	METAL CHIP 10K 5% 1/16W
R4967	1-240-707-91	METAL CHIP 10K 5% 1/20W
R4968	1-240-716-91	METAL CHIP 68K 5% 1/20W
R5100	(Not supplied)	METAL CHIP 47K 1% 1/20W
R5151	1-250-535-11	METAL CHIP 47K 1% 1/16W
* R5152	1-250-511-11	METAL CHIP 4.7K 1% 1/16W
* R5154	1-250-545-11	METAL CHIP 120K 1% 1/16W
R5155	1-250-521-11	METAL CHIP 12K 1% 1/16W
* R5156	1-250-523-11	METAL CHIP 15K 1% 1/16W
R5200	1-218-941-81	METAL CHIP 100 5% 1/16W
R5201	(Not supplied)	METAL CHIP 100K 1% 1/20W
* R5202	1-257-273-11	METAL CHIP 33K 1% 1/20W
R5250	1-240-729-91	METAL CHIP 1M 5% 1/20W
R5251	1-240-718-91	METAL CHIP 100K 5% 1/20W
R5253	1-248-311-11	RES-CHIP 0.1 1% 1/4W
R5254	1-248-311-11	RES-CHIP 0.1 1% 1/4W
R5255	1-208-931-11	METAL CHIP 68K 0.5% 1/16W
R5256	1-208-931-11	METAL CHIP 68K 0.5% 1/16W
R5257	1-208-935-11	METAL CHIP 100K 0.5% 1/16W
R5258	1-208-935-11	METAL CHIP 100K 0.5% 1/16W
R5259	1-240-718-91	METAL CHIP 100K 5% 1/20W
R5260	1-240-722-91	METAL CHIP 220K 5% 1/20W
R5261	1-208-955-11	METAL CHIP 680K 0.5% 1/16W
R5262	1-208-955-11	METAL CHIP 680K 0.5% 1/16W
R5325	1-218-954-11	METAL CHIP 1.2K 5% 1/16W
R5327	1-250-519-11	METAL CHIP 10K 1% 1/16W
* R5328	1-250-528-11	METAL CHIP 24K 1% 1/16W

Ref. No.	Part No.	Description			
R5329	1-218-965-11	METAL CHIP	10K	5%	1/16W
R5331	1-240-707-91	METAL CHIP	10K	5%	1/20W
R5334	1-218-981-81	METAL CHIP	220K	5%	1/16W
R5336	1-250-553-11	METAL CHIP	270K	1%	1/16W
R5337	1-250-519-11	METAL CHIP	10K	1%	1/16W
R5500	1-240-711-91	METAL CHIP	22K	5%	1/20W
R5501	1-218-953-11	METAL CHIP	1K	5%	1/16W
R5520	1-240-722-91	METAL CHIP	220K	5%	1/20W
R5543	(Not supplied)	METAL CHIP	100K	1%	1/20W
R5544	(Not supplied)	METAL CHIP	47K	1%	1/20W
R5600	1-240-707-91	METAL CHIP	10K	5%	1/20W
R5650	1-240-679-91	METAL CHIP	47	5%	1/20W
* R5654	1-250-503-11	METAL CHIP	2.2K	1%	1/16W
R5655	1-240-699-91	METAL CHIP	2.2K	5%	1/20W
R5656	1-240-699-91	METAL CHIP	2.2K	5%	1/20W
R5701	1-240-701-91	METAL CHIP	3.3K	5%	1/20W
R5702	1-240-697-91	METAL CHIP	1.5K	5%	1/20W
R5711	1-240-711-91	METAL CHIP	22K	5%	1/20W
R5712	1-240-676-91	METAL CHIP	22	5%	1/20W
R5713	1-240-676-91	METAL CHIP	22	5%	1/20W
R6001	1-218-953-11	METAL CHIP	1K	5%	1/16W
R6040	1-240-695-91	METAL CHIP	1K	5%	1/20W
* R6060	1-250-507-11	METAL CHIP	3.3K	1%	1/16W
R6061	1-250-521-11	METAL CHIP	12K	1%	1/16W
* R6062	1-250-507-11	METAL CHIP	3.3K	1%	1/16W
R6080	1-400-354-11	INDUCTOR, FERRITE BEAD (1005)			
R6083	1-240-683-91	METAL CHIP	100	5%	1/20W
R6084	1-240-681-91	METAL CHIP	68	5%	1/20W
R6085	1-240-678-91	METAL CHIP	33	5%	1/20W
R6086	1-240-678-91	METAL CHIP	33	5%	1/20W
R6087	1-400-354-11	INDUCTOR, FERRITE BEAD (1005)			
R6088	1-400-354-11	INDUCTOR, FERRITE BEAD (1005)			
R6089	1-400-354-11	INDUCTOR, FERRITE BEAD (1005)			
R6090	1-400-354-11	INDUCTOR, FERRITE BEAD (1005)			
R6091	1-400-354-11	INDUCTOR, FERRITE BEAD (1005)			
R6092	1-400-354-11	INDUCTOR, FERRITE BEAD (1005)			
R6125	(Not supplied)	METAL CHIP	220	1%	1/20W
R6126	(Not supplied)	METAL CHIP	220	1%	1/20W
R6128	(Not supplied)	METAL CHIP	240	1%	1/20W
R6129	(Not supplied)	METAL CHIP	10K	1%	1/20W
R6130	(Not supplied)	METAL CHIP	10K	1%	1/20W
R6220	1-240-676-91	METAL CHIP	22	5%	1/20W
R6700	1-240-683-91	METAL CHIP	100	5%	1/20W
R6702	1-240-718-91	METAL CHIP	100K	5%	1/20W
R6703	1-240-711-91	METAL CHIP	22K	5%	1/20W
R6704	1-240-729-91	METAL CHIP	1M	5%	1/20W
R6706	1-240-707-91	METAL CHIP	10K	5%	1/20W
R6707	1-240-707-91	METAL CHIP	10K	5%	1/20W
R6708	1-218-941-81	METAL CHIP	100	5%	1/16W
R6709	1-240-695-91	METAL CHIP	1K	5%	1/20W
R6710	1-240-729-91	METAL CHIP	1M	5%	1/20W
R6711	1-240-707-91	METAL CHIP	10K	5%	1/20W
R6712	1-240-707-91	METAL CHIP	10K	5%	1/20W
R6714	1-240-703-91	METAL CHIP	4.7K	5%	1/20W
R6760	1-240-695-91	METAL CHIP	1K	5%	1/20W
R6780	1-240-718-91	METAL CHIP	100K	5%	1/20W
R6781	1-240-718-91	METAL CHIP	100K	5%	1/20W
R6782	1-240-703-91	METAL CHIP	4.7K	5%	1/20W

Ref. No.	Part No.	Description			
R6783	1-240-683-91	METAL CHIP	100	5%	1/20W
R7890	1-240-695-91	METAL CHIP	1K	5%	1/20W
R7891	1-216-796-11	METAL CHIP	8.2	5%	1/10W
R7892	1-216-799-11	METAL CHIP	15	5%	1/10W
R8500	1-250-515-11	METAL CHIP	6.8K	1%	1/16W
R8501	1-250-515-11	METAL CHIP	6.8K	1%	1/16W
* R8502	1-250-503-11	METAL CHIP	2.2K	1%	1/16W
* R8503	1-250-479-11	METAL CHIP	220	1%	1/16W
* R8504	1-250-479-11	METAL CHIP	220	1%	1/16W
* R8505	1-250-503-11	METAL CHIP	2.2K	1%	1/16W
R8506	1-240-699-91	METAL CHIP	2.2K	5%	1/20W
R8507	1-240-699-91	METAL CHIP	2.2K	5%	1/20W
R8508	1-240-722-91	METAL CHIP	220K	5%	1/20W
R8800	1-218-965-11	METAL CHIP	10K	5%	1/16W
R8801	1-250-567-11	METAL CHIP	1M	1%	1/16W
R9000	1-240-712-91	METAL CHIP	27K	5%	1/20W
		< COMPOSITION CIRCUIT BLOCK >			
* RB0700	1-234-384-11	RES, NETWORK	1M (1005X4)		
RB0701	1-234-380-21	RES, NETWORK	47K (1005X4)		
RB1050	1-234-377-21	RES, NETWORK	4.7K (1005X4)		
RB1101	1-234-381-11	RES, NETWORK	100K (1005X4)		
RB1102	1-234-378-21	RES, NETWORK	10K (1005X4)		
RB1104	1-234-383-21	RES, NETWORK	470K (1005X4)		
RB1105	1-234-371-11	RES, NETWORK	47 (1005X4)		
RB3000	1-234-387-21	RES, NETWORK	330 (1005X4)		
RB3017	1-200-051-21	RES, NETWORK	150 (1005X4)		
RB3018	1-200-051-21	RES, NETWORK	150 (1005X4)		
RB3019	1-200-051-21	RES, NETWORK	150 (1005X4)		
RB3020	1-200-051-21	RES, NETWORK	150 (1005X4)		
RB3021	1-234-387-21	RES, NETWORK	330 (1005X4)		
RB3022	1-234-387-21	RES, NETWORK	330 (1005X4)		
RB3023	1-234-387-21	RES, NETWORK	330 (1005X4)		
RB3024	1-234-387-21	RES, NETWORK	330 (1005X4)		
RB3025	1-234-387-21	RES, NETWORK	330 (1005X4)		
RB3026	1-234-387-21	RES, NETWORK	330 (1005X4)		
RB3027	1-234-387-21	RES, NETWORK	330 (1005X4)		
RB3028	1-200-051-21	RES, NETWORK	150 (1005X4)		
RB3029	1-200-051-21	RES, NETWORK	150 (1005X4)		
RB3800	1-234-381-11	RES, NETWORK	100K (1005X4)		
* RB4800	1-246-123-21	RES, NETWORK	27 (1005X4)		
RB4900	1-234-380-21	RES, NETWORK	47K (1005X4)		
RB5700	1-234-378-21	RES, NETWORK	10K (1005X4)		
RB6082	1-234-371-11	RES, NETWORK	47 (1005X4)		
RB6083	1-242-963-21	RES, NETWORK	33 (1005X4)		
RB6700	1-234-378-21	RES, NETWORK	10K (1005X4)		
RB6701	1-234-381-11	RES, NETWORK	100K (1005X4)		
RB6702	1-234-374-21	RES, NETWORK	470 (1005X4)		
RB6703	1-234-374-21	RES, NETWORK	470 (1005X4)		
RB6760	1-234-381-11	RES, NETWORK	100K (1005X4)		
RB7301	1-234-372-11	RES, NETWORK	100 (1005X4)		
RB7302	1-234-372-11	RES, NETWORK	100 (1005X4)		
RB9000	1-234-375-21	RES, NETWORK	1K (1005X4)		
		< SENSOR >			
* SE7731	1-490-064-31	SENSOR 3 AXIAL ACCELERATION			

Ref. No.	Part No.	Description
		< VARISTOR >
VDR670	1-802-090-21	VARISTOR, CHIP
		< VIBRATOR >
X1000	(Not supplied)	QUARTZ CRYSTAL OSCILLATOR (12MHz)
X5700	1-781-525-11	VIBRATOR, CRYSTAL (32.768kHz)
X5701	1-814-304-11	VIBRATOR, CRYSTAL (12MHz)

4. BLOCK DIAGRAMS

4-1. OVERALL BLOCK DIAGRAM (1/2)

( ) : Number in parenthesis ( ) indicates the division number of schematic diagram where the component is located.

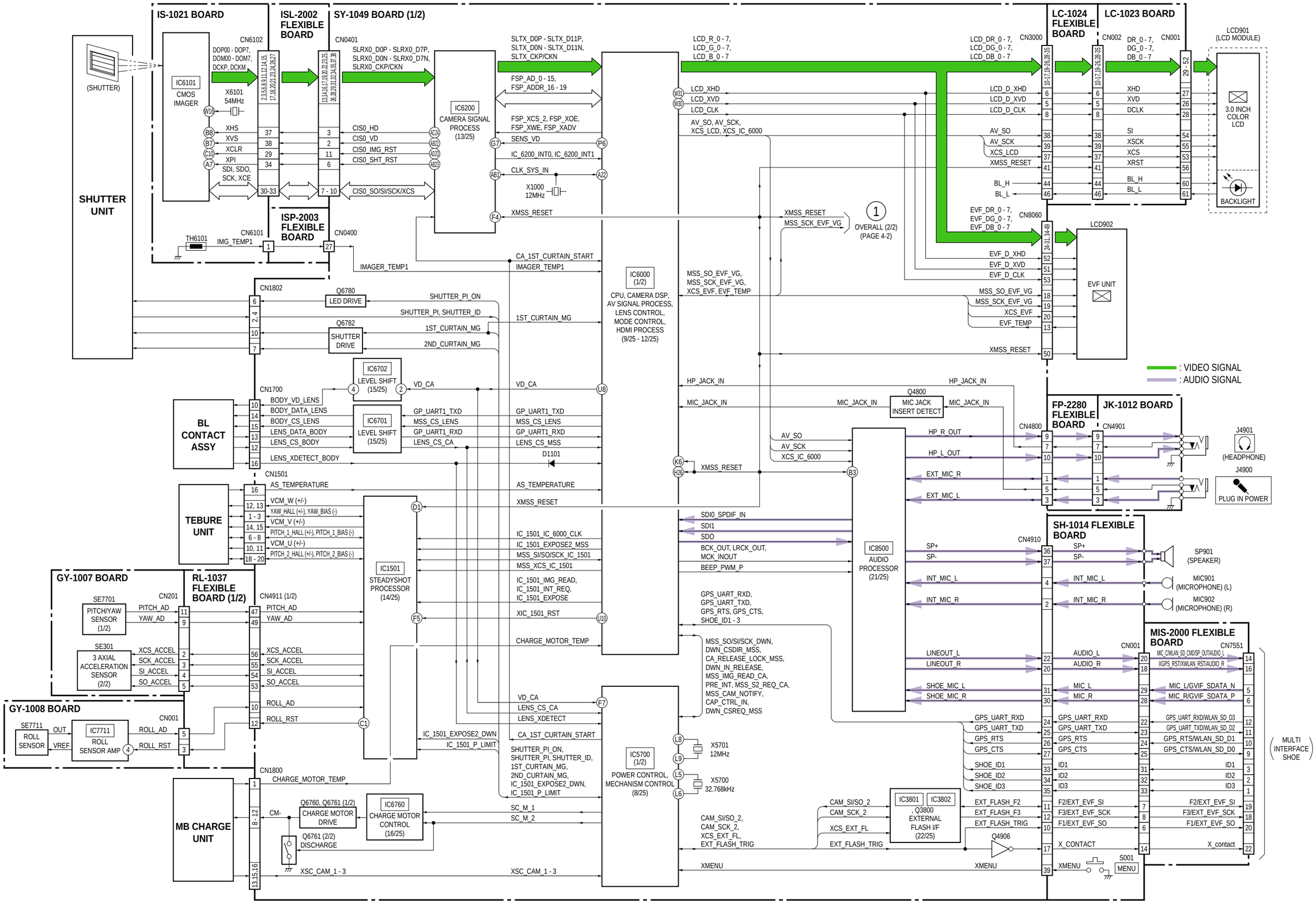

4-2. OVERALL BLOCK DIAGRAM (2/2)

( ) : Number in parenthesis ( ) indicates the division number of schematic diagram where the component is located.

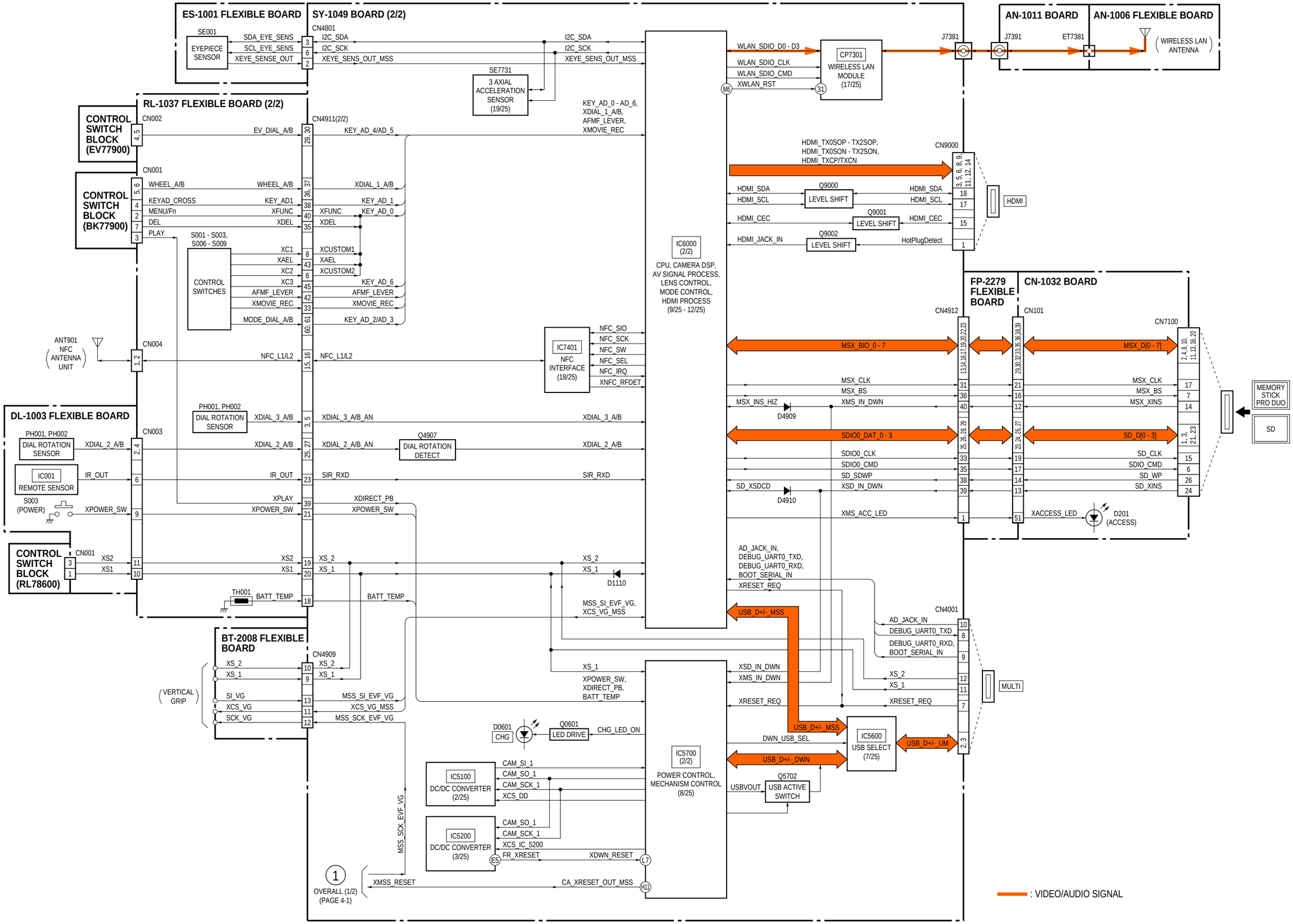

4-3. POWER BLOCK DIAGRAM (1/3)

( ) : Number in parenthesis ( ) indicates the division number of schematic diagram where the component is located.

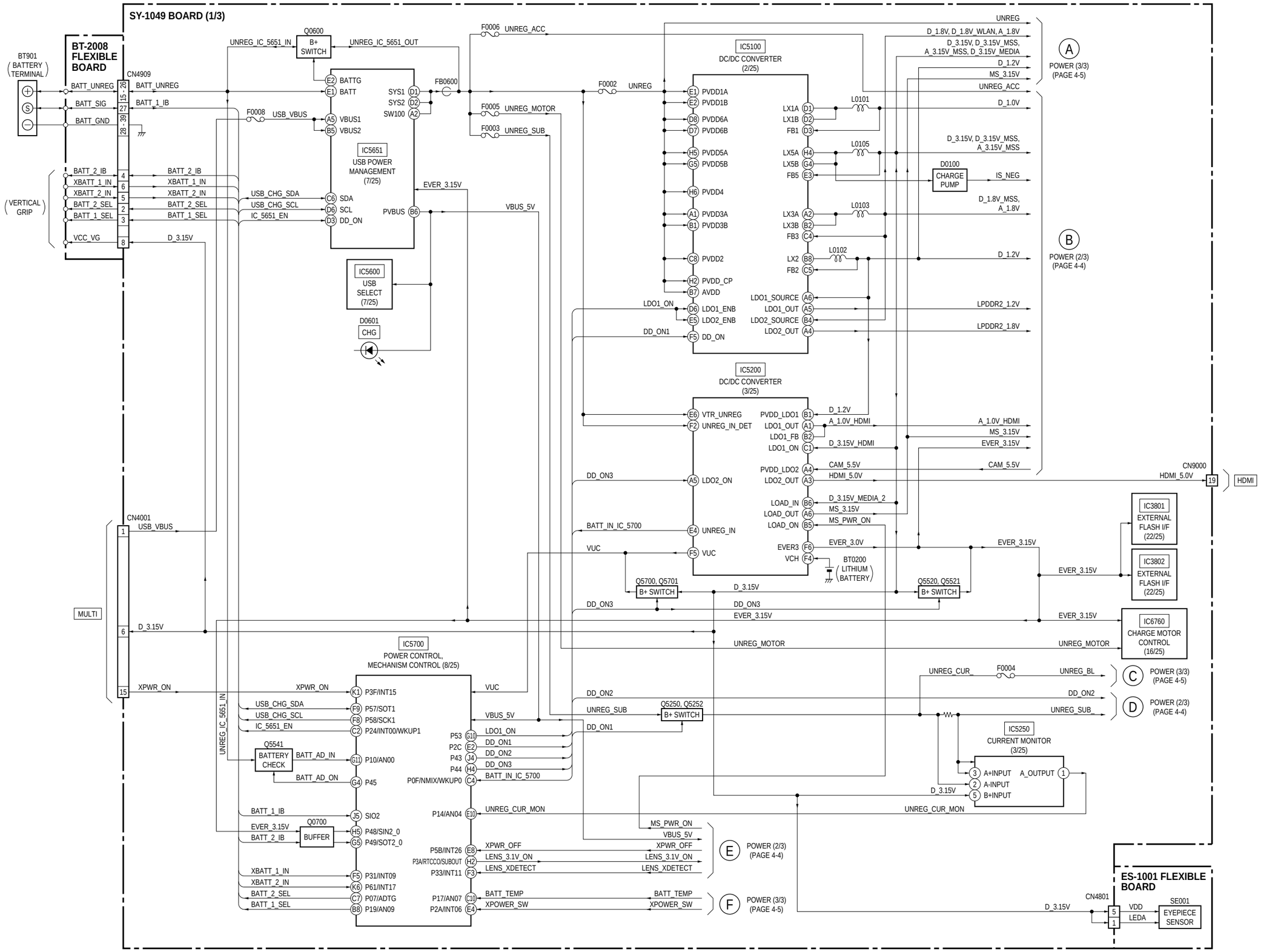

4-4. POWER BLOCK DIAGRAM (2/3)

( ) : Number in parenthesis ( ) indicates the division number of schematic diagram where the component is located.

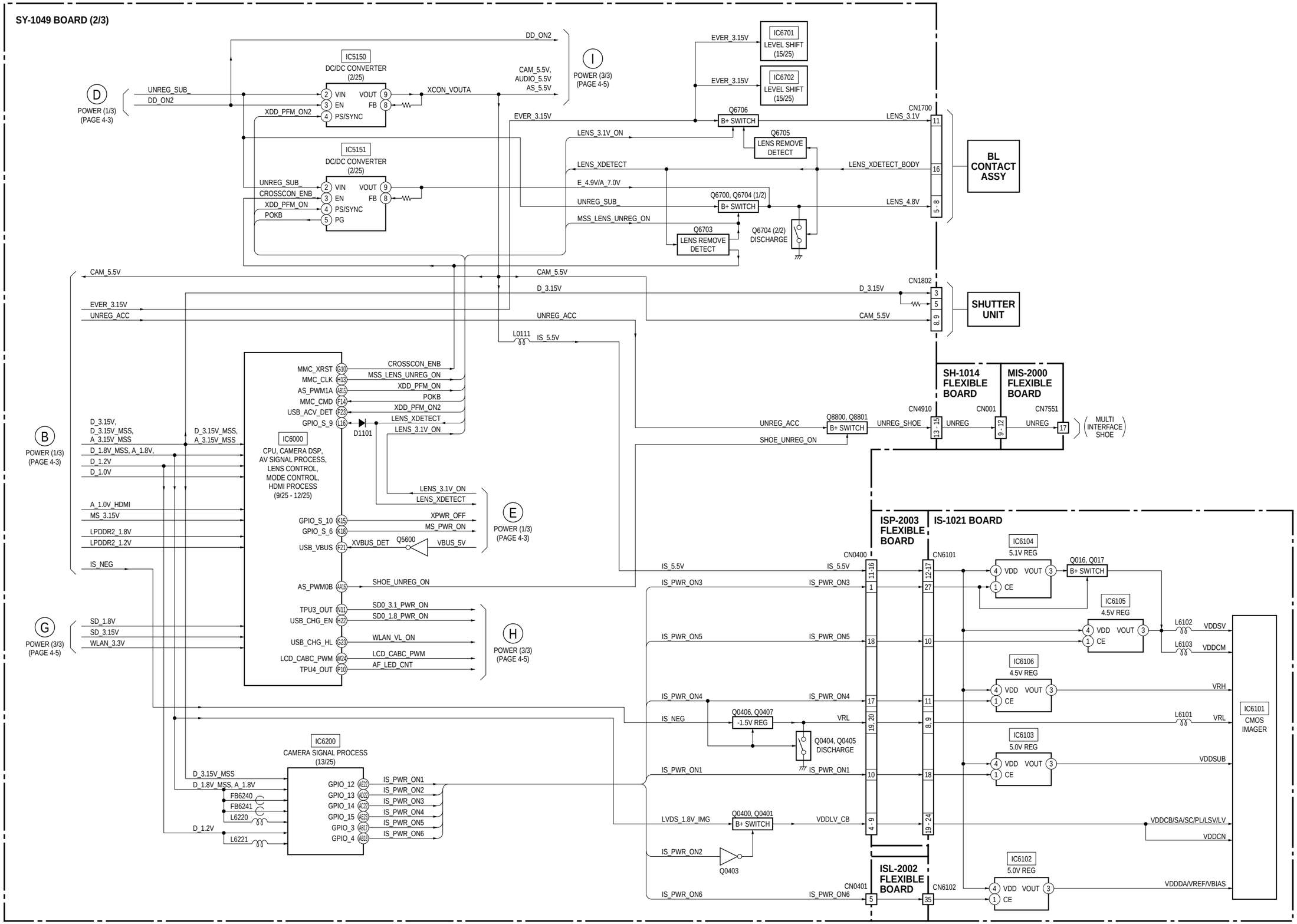

4-5. POWER BLOCK DIAGRAM (3/3)

( ) : Number in parenthesis ( ) indicates the division number of schematic diagram where the component is located.

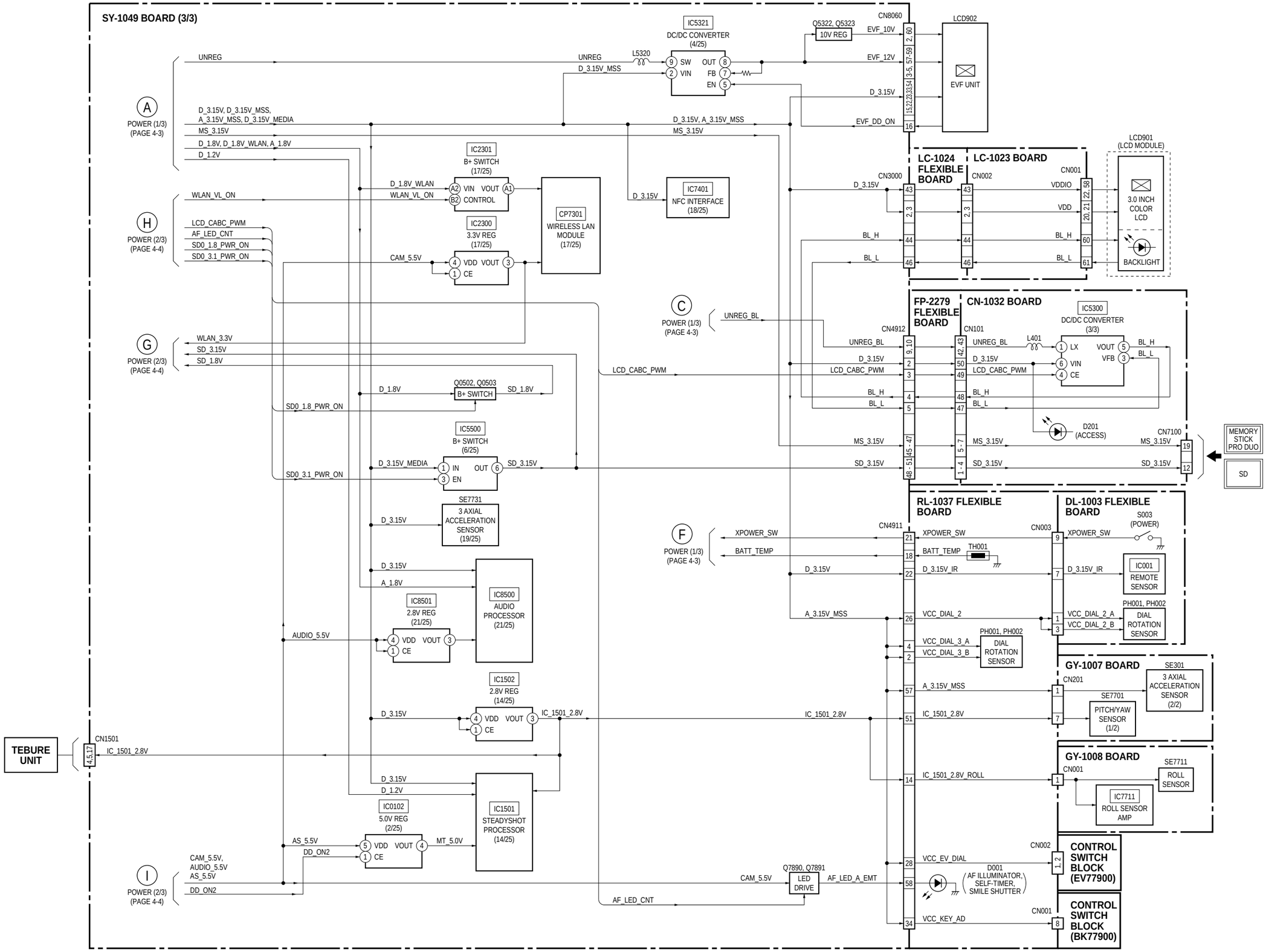

5. FRAME SCHEMATIC DIAGRAMS

5-1. FRAME SCHEMATIC DIAGRAM (1/2)

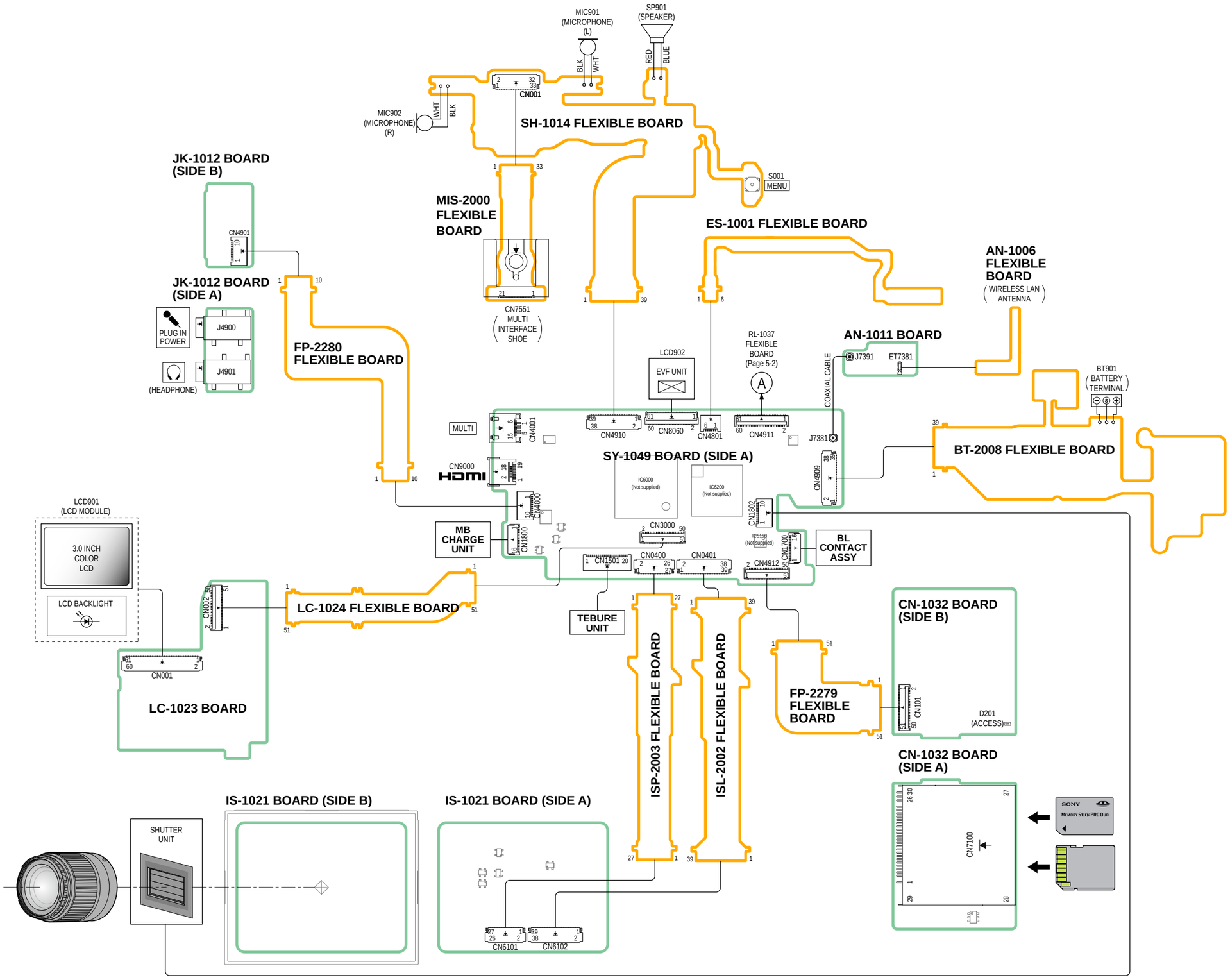

5-2. FRAME SCHEMATIC DIAGRAM (2/2)

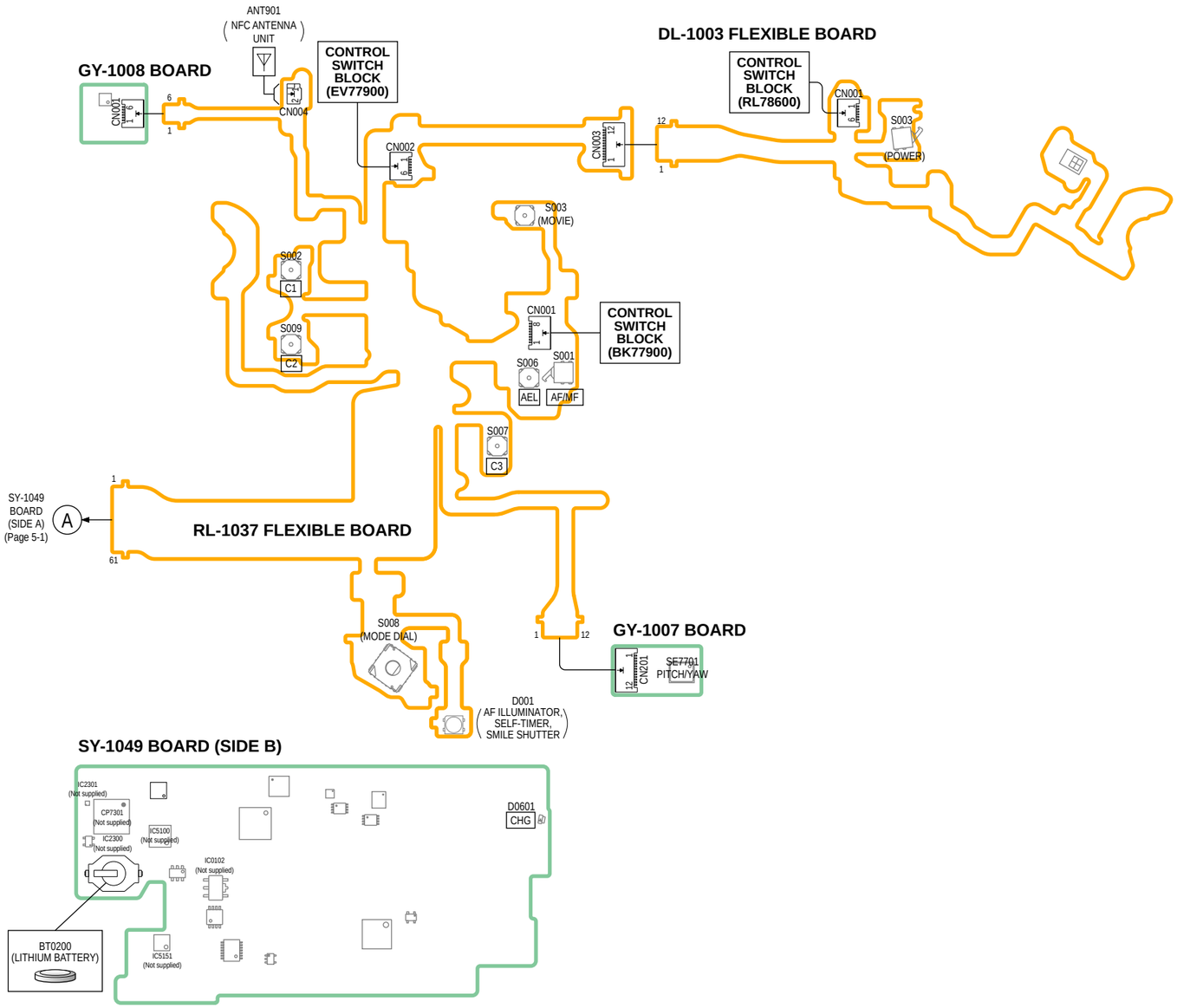

6. SCHEMATIC DIAGRAMS AND PRINTED WIRING BOARDS

– ENGLISH –

THIS NOTE IS COMMON FOR SCHEMATIC DIAGRAMS AND PRINTED WIRING BOARDS
(In addition to this, the necessary note is printed in each block)

For Schematic Diagrams

- All capacitors are in μF unless otherwise noted. pF : μμF. 50 V or less are not indicated except for electrolytics and tantalums.
- Chip resistors are 1/10 W unless otherwise noted. kΩ=1000 Ω, MΩ=1000 kΩ.
- Caution when replacing chip parts. New parts must be attached after removal of chip. Be careful not to heat the minus side of tantalum capacitor, Because it is damaged by the heat.
- Some chip part will be indicated as follows.

  Example C541 L452
  22U 10UH
  TA A 2520

  Kinds of capacitor — Case size — External dimensions (mm)
- Constants of resistors, capacitors, ICs and etc with XX indicate that they are not used. In such cases, the unused circuits may be indicated.
- Parts with ★ differ according to the model/destination. Refer to the mount table for each function.
- All variable and adjustable resistors have characteristic curve B, unless otherwise noted.
- Signal name
  XEDIT → $\overline{\text{EDIT}}$ PB/XREC → PB/$\overline{\text{REC}}$
- : non flammable resistor
- : fusible resistor
- : panel designation
- : B+ Line
- : B– Line
- : IN/OUT direction of (+, –) B LINE.
- : adjustment for repair.

For Printed Wiring Boards

- : Uses unleaded solder.
- : Circuit board
  : Flexible board
  Pattern from the side which enables seeing.
  : pattern of the rear side
  (The other layers' patterns are not indicated)
- Through hole is omitted.
- There are a few cases that the part printed on diagram isn't mounted in this model.
- : panel designation

- Chip parts.

Transistor

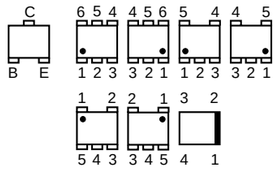

Diode

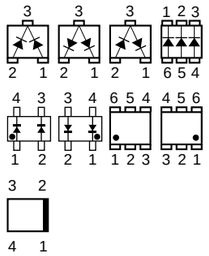

Precautions for Replacement of Imager

- If the imager has been replaced, carry out all the adjustments for the camera section.
- As the imager may be damaged by static electricity from its structure, handle it carefully like for the MOS IC.
  In addition, ensure that the receiver is not covered with dusts nor exposed to strong light.

When indicating parts by reference number, please include the board name.

The components identified by mark ⚠ or dotted line with mark ⚠ are critical for safety.
Replace only with part number specified.

Les composants identifiés par une marque ⚠ sont critiques pour la sécurité.
Ne les remplacer que par une pièce portant le numéro spécifié.

– JAPANESE –

回路図，プリント図共通ノート
（他に必要なノートは各セクションに記載しています）

回路図ノート

- ケミコン，タンタルを除くコンデンサで，耐圧50V以下のものはその耐圧を省略。単位はすべてμF（pはpF）。
- チップ抵抗で指示のないものは，1/10W以下。
  kΩ＝1000Ω，MΩ＝1000kΩ
- チップ部品交換時の注意
  取り外した部品は再使用せず，未使用の部品をご使用ください。
  タンタルコンデンサのマイナス側は熱に弱いため注意してください。
- チップ部品には下記のように表示したものがあります。

  例 C541 L452
  22U 10UH
  TA A 2520

  種類 — ケースサイズ — 外形寸法（mm）
- 抵抗，コンデンサ，ICなど定数にXXがあるものは，使用していない事を示しています。このため，使用していない回路が記載されている事があります。
- ★印のある部品は，機種などにより異なりますので機能別マウント一覧表を参照してください。
- 可変抵抗と半固定抵抗で，B特性の表示を省略。
- 信号名表記について，下記のような場合があります。
  XEDIT → $\overline{\text{EDIT}}$ PB/XREC → PB/$\overline{\text{REC}}$
- は不燃性抵抗。
- はヒューズ抵抗。
- はパネル表示名称。
- はB＋ライン。
- はB－ライン。
- はBライン（＋，－）の入出力方向を示す。
- は調整名称。

プリント図ノート

- ：無鉛半田を使用しています。
- ：基板
  ：フレキシブル配線板
  見ている面側のパターン。
  ：裏側のパターン
  （他のパターンについては表示されていません）
- スルーホールは省略。
- プリント図には，本機で使用していない部品が記載されている場合があります。
- はパネル表示名称。

- Chip parts.

Transistor

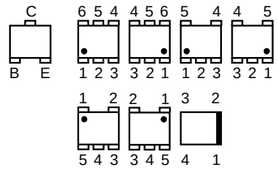

Diode

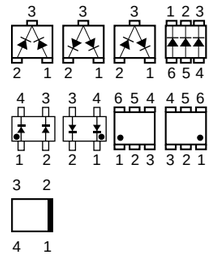

イメージャ交換時の注意

- イメージャを交換した場合は，カメラ部の全調整を行ってください。
- イメージャは構造上，静電気により破壊される恐れがあるため，MOS ICと同様に注意して取り扱ってください。
  また，受光部にはゴミの付着，および強い光がはいることのないように注意してください。

お願い
図面番号で部品を指定するときは基板名又はブロックを併せて指定してください。

⚠印の部品，または⚠印付の点線で囲まれた部品は，安全性を維持するために，重要な部品です。
従って交換時は，必ず指定の部品を使用してください。

6-1. SCHEMATIC DIAGRAMS

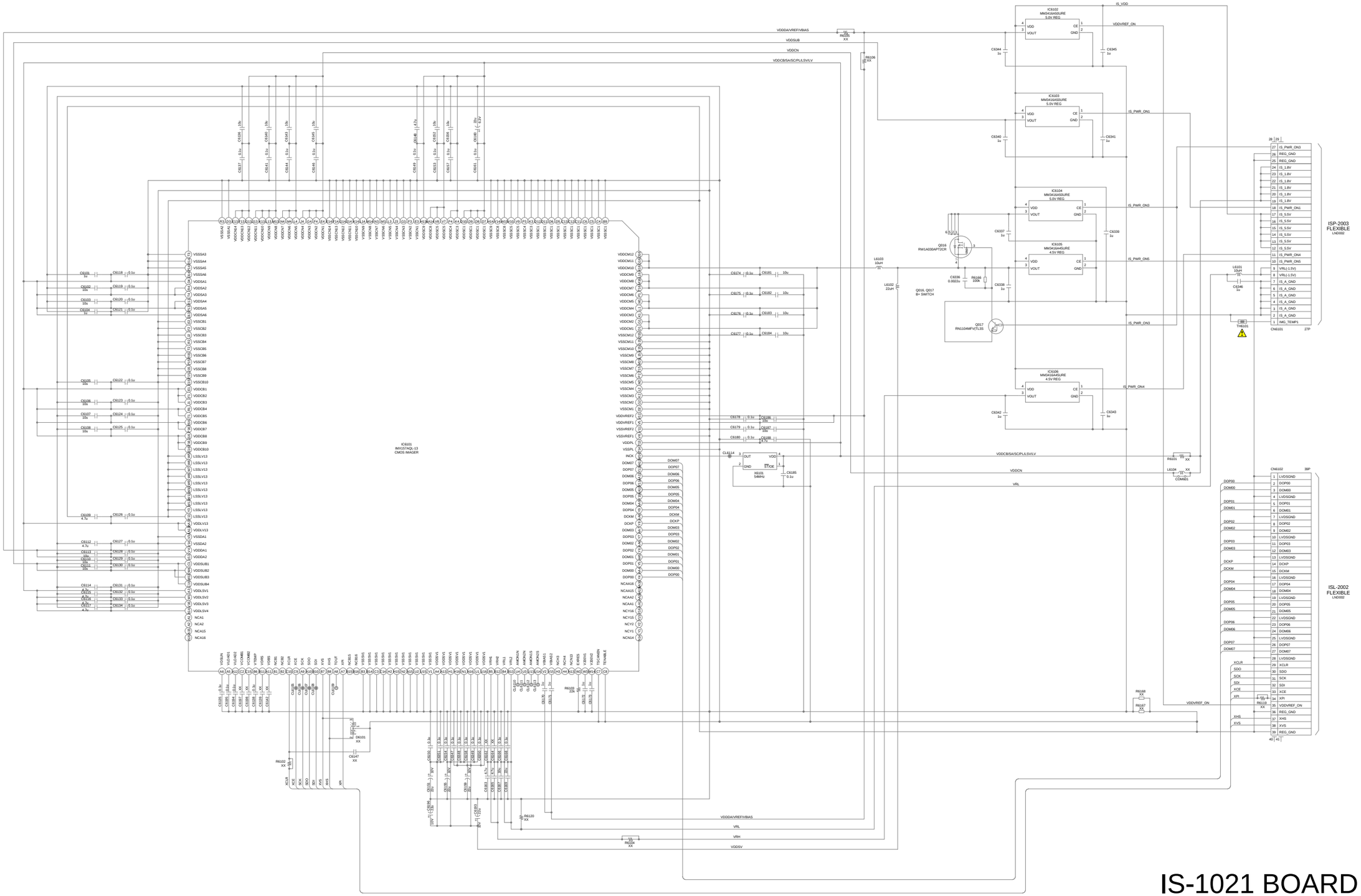

IS-1021 BOARD

XX MARK: NO MOUNT

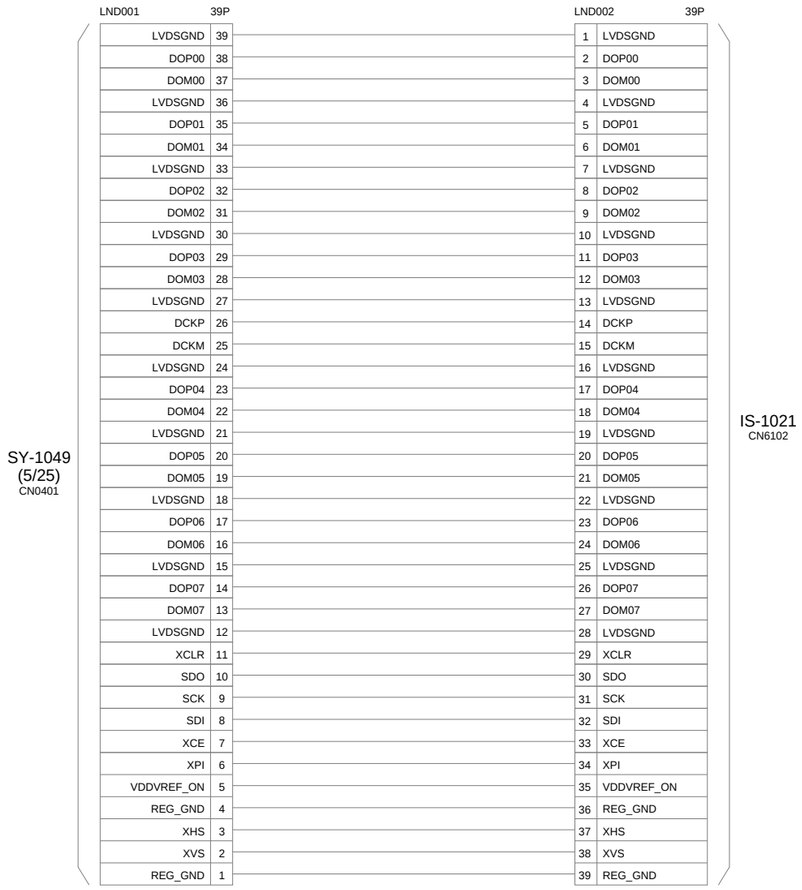

ISL-2002 FLEXIBLE BOARD

(PRINTED WIRING BOARD is omitted.)

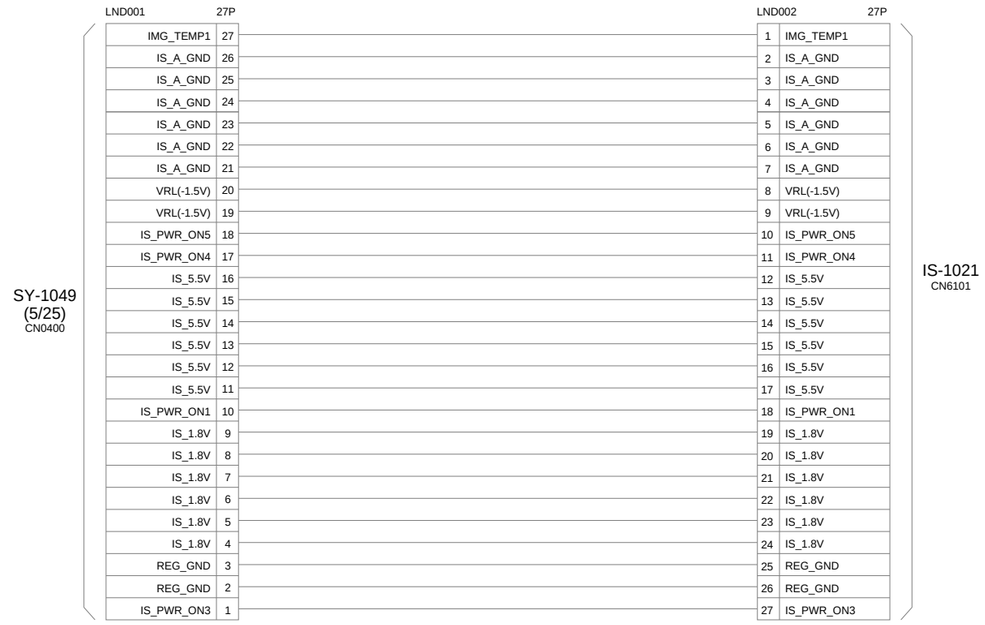

ISP-2003 FLEXIBLE BOARD

(PRINTED WIRING BOARD is omitted.)

SY-1049 BOARD (1/25)

XX MARK: NO MOUNT

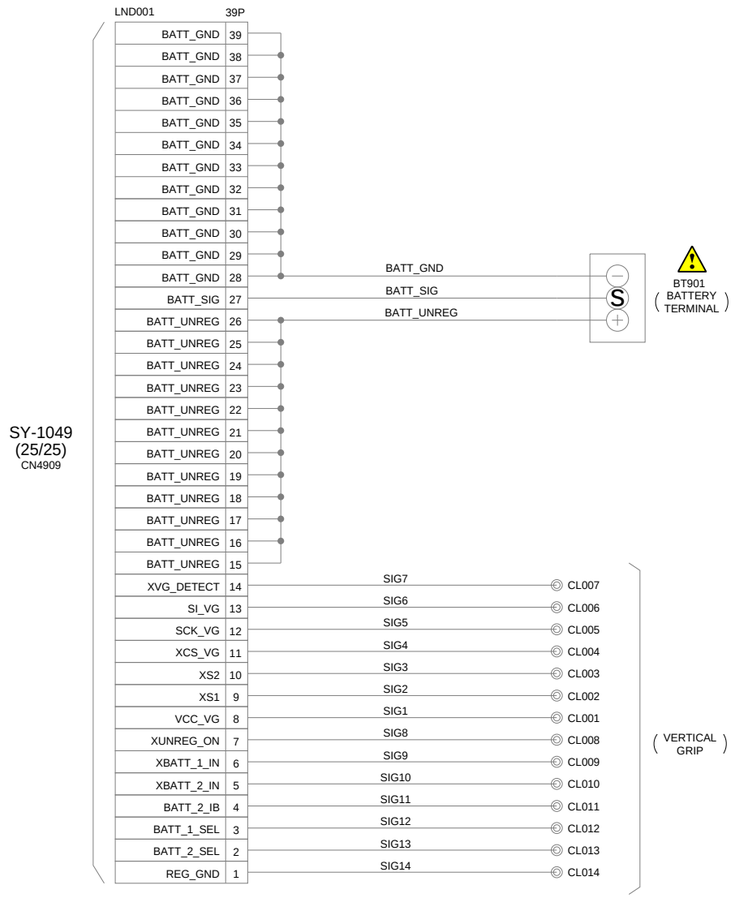

BT-2008 FLEXIBLE BOARD

(PRINTED WIRING BOARD is omitted.)

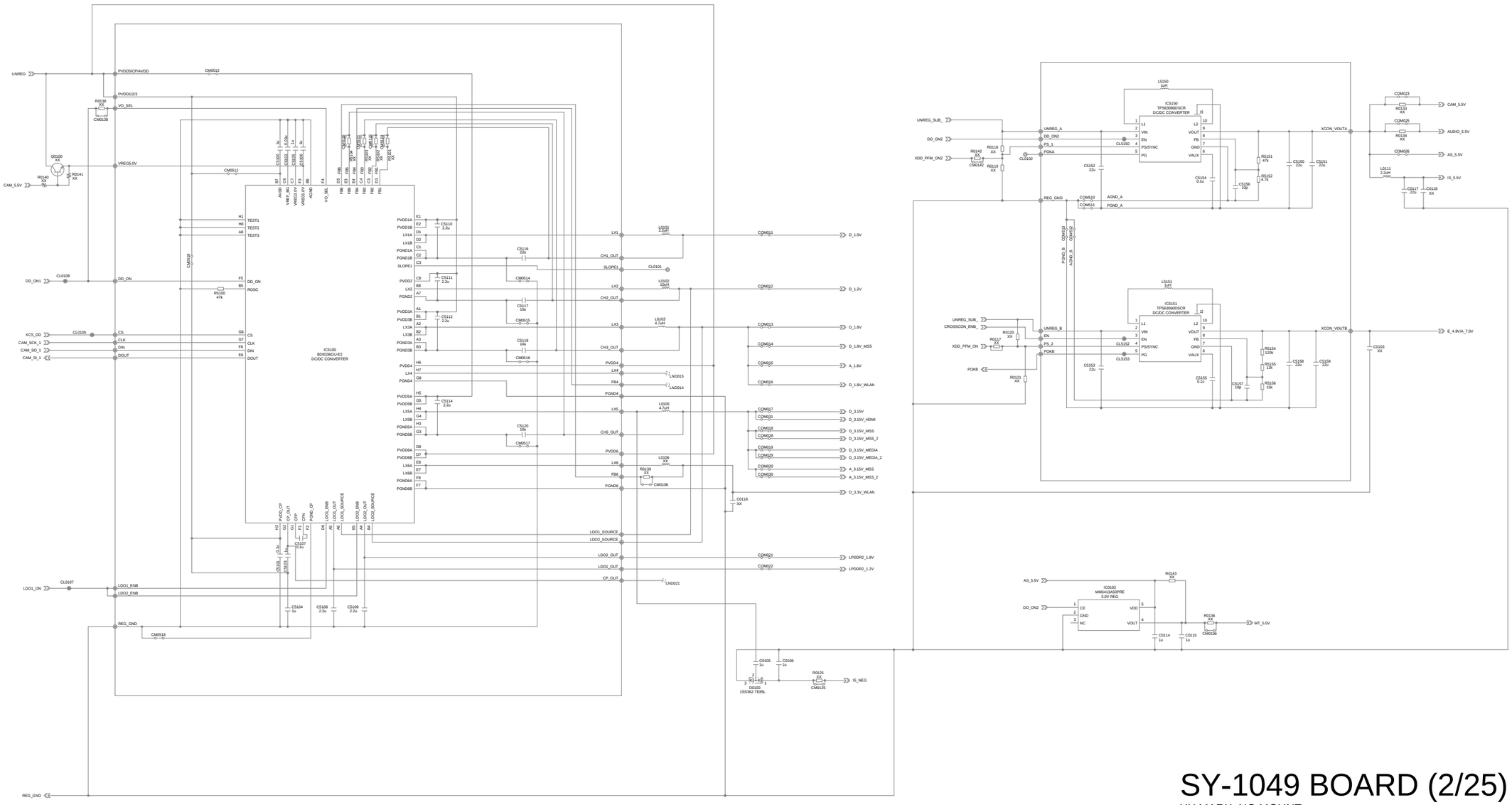

SY-1049 BOARD (2/25)

XX MARK: NO MOUNT

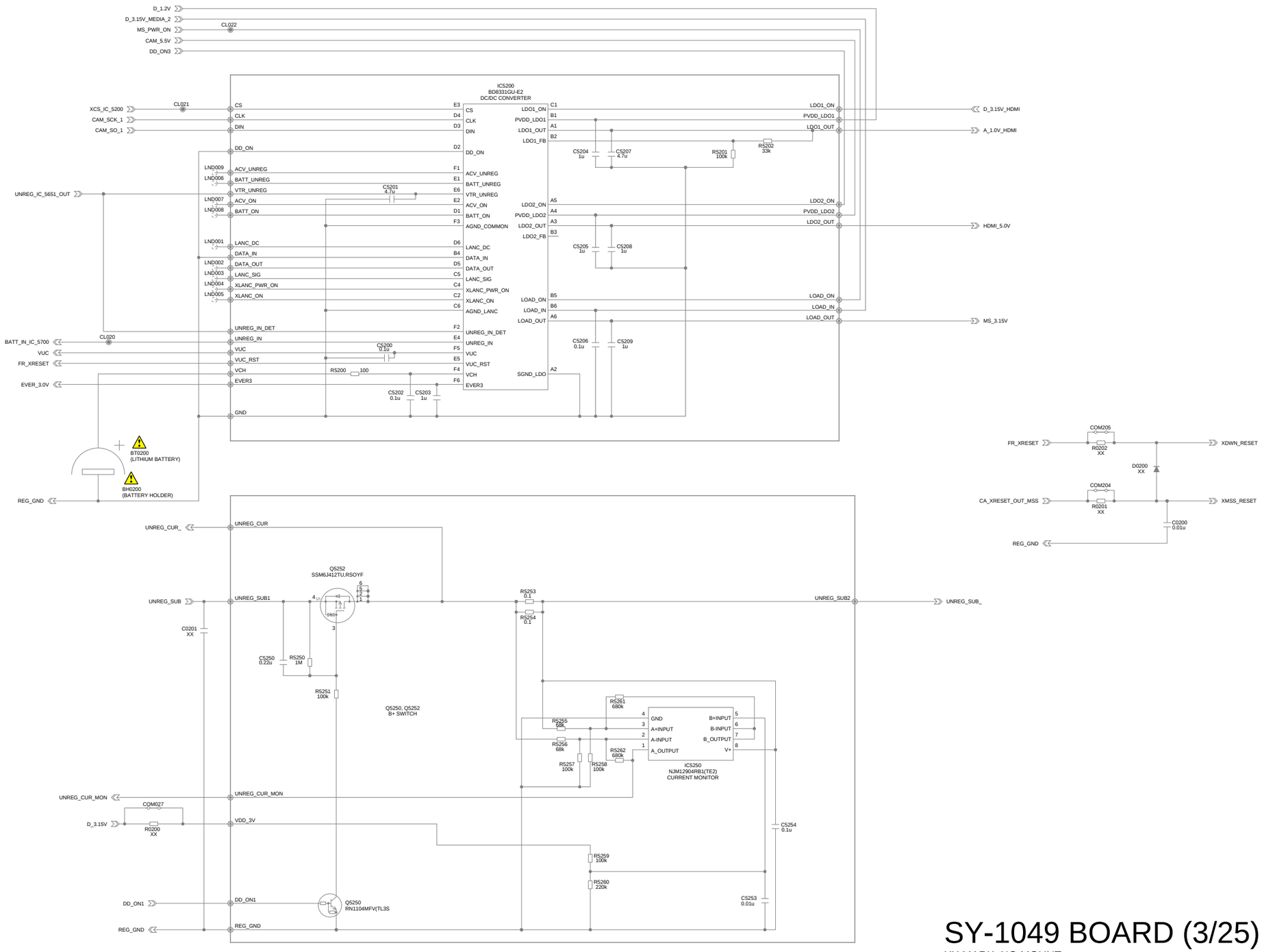

SY-1049 BOARD (3/25)

XX MARK: NO MOUNT

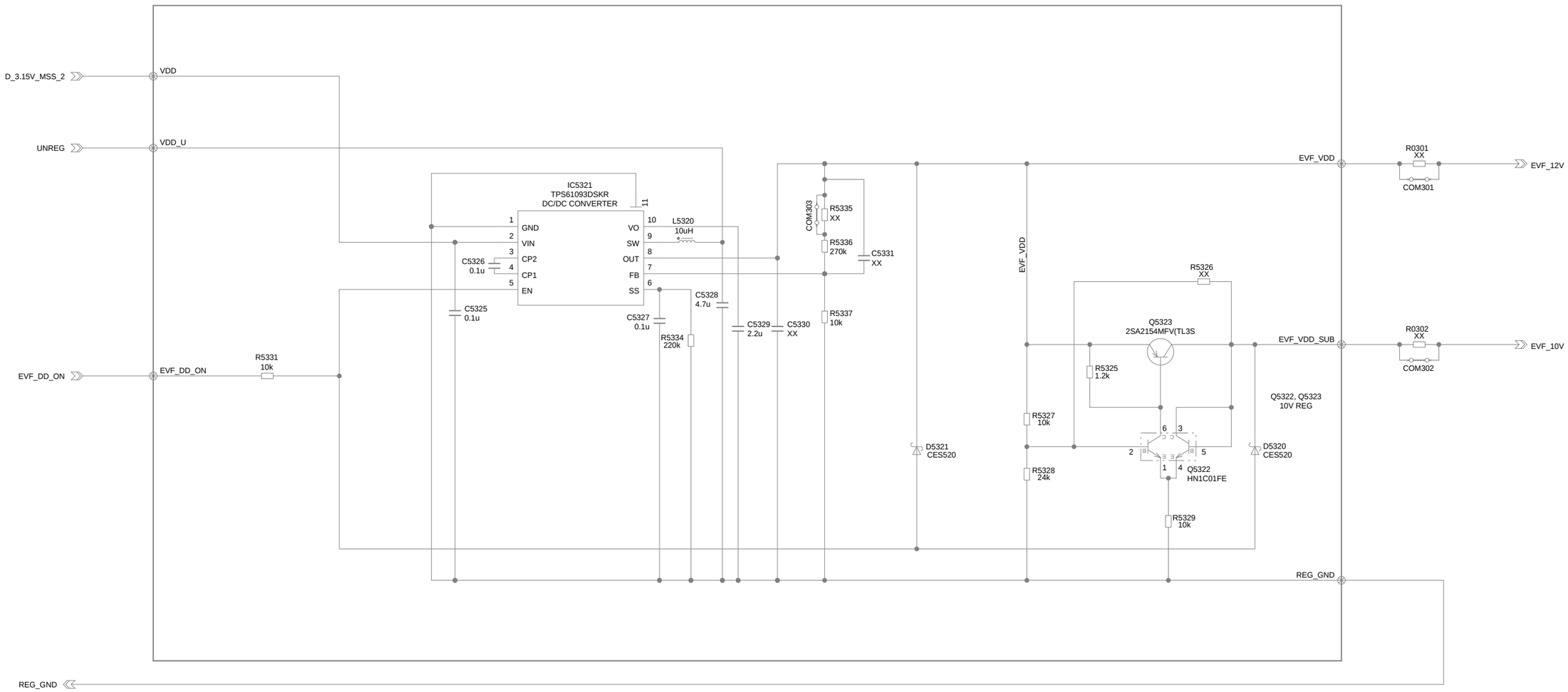

SY-1049 BOARD (4/25)

XX MARK: NO MOUNT

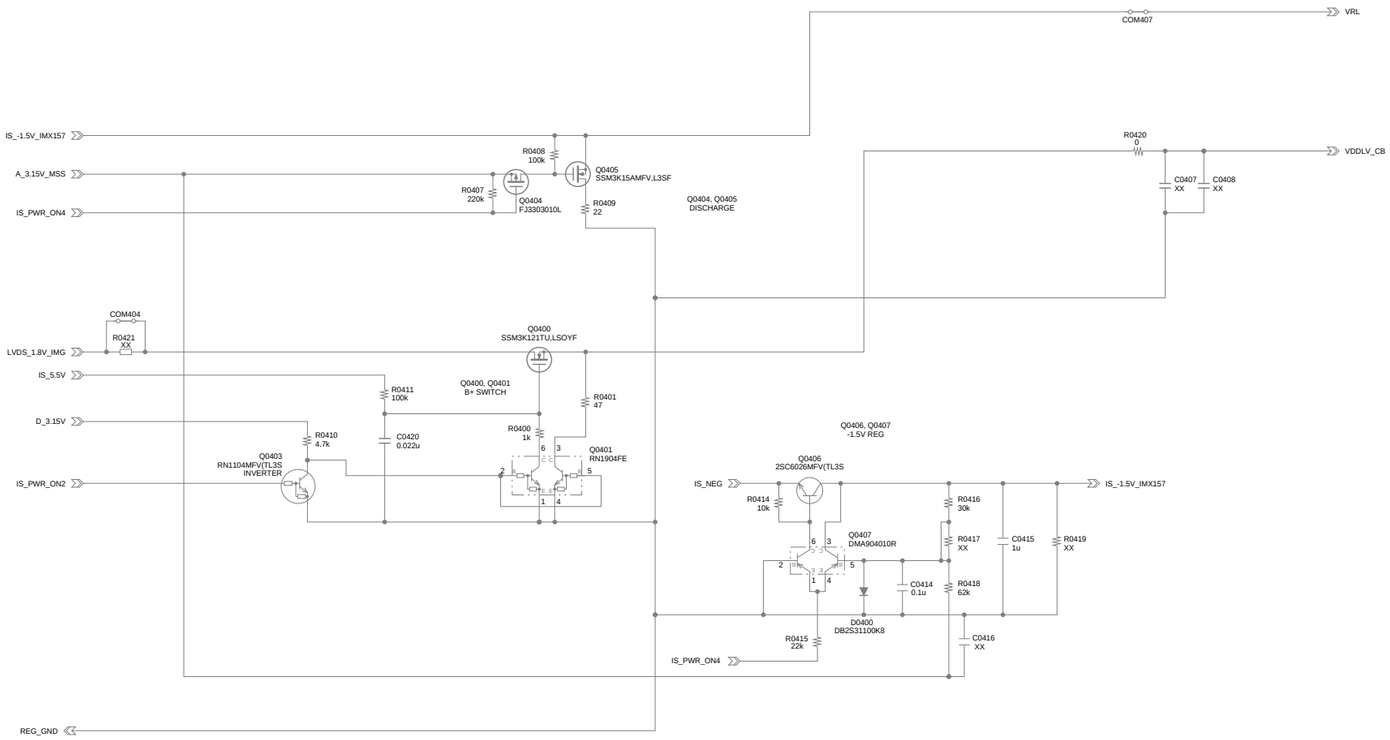

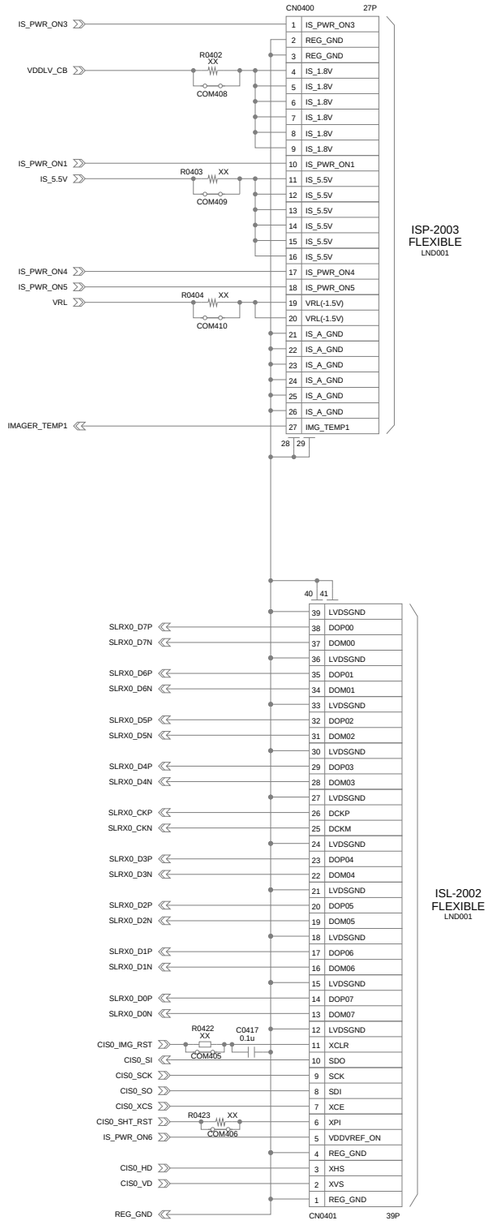

SY-1049 BOARD (5/25)

XX MARK: NO MOUNT

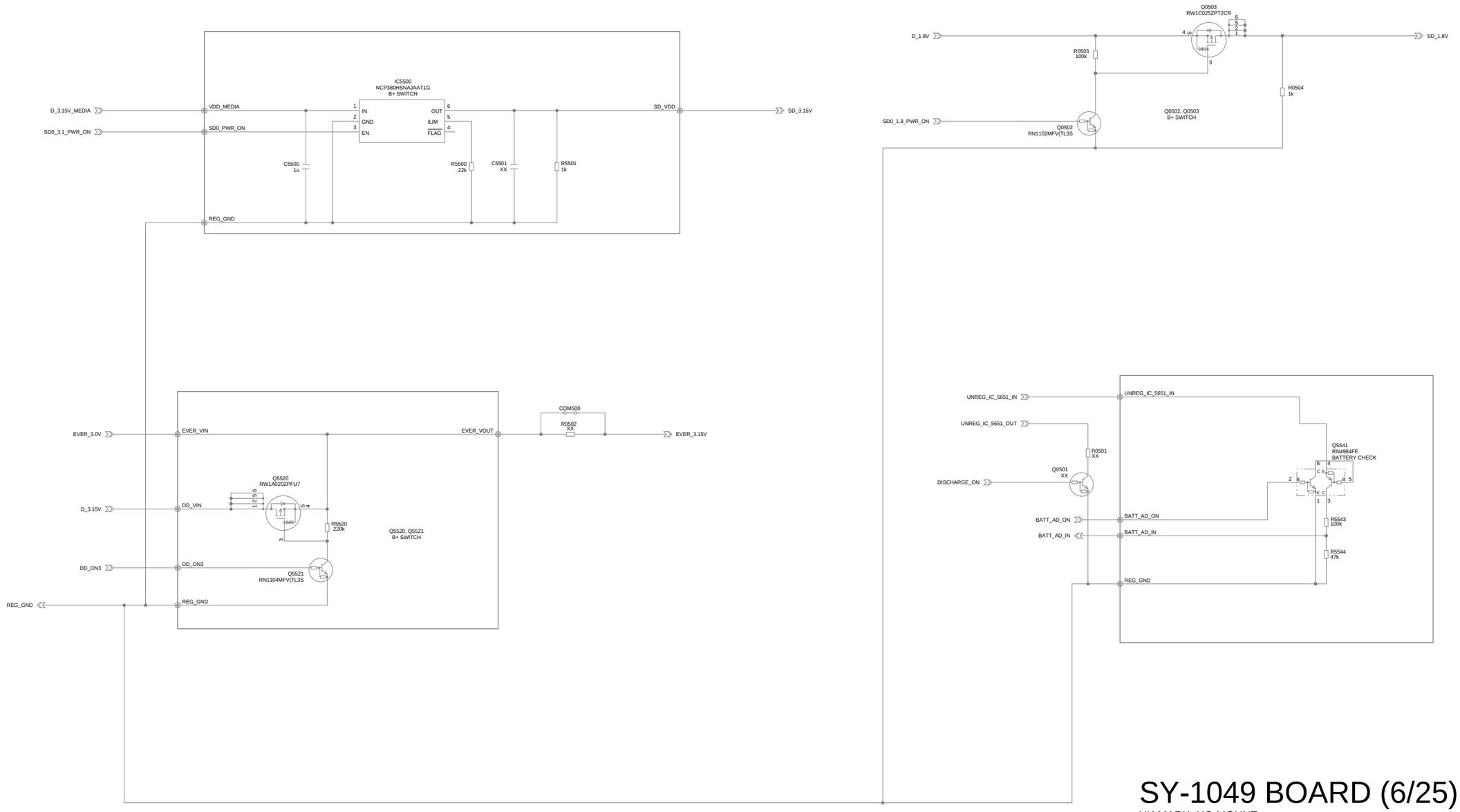

SY-1049 BOARD (6/25)

XX MARK: NO MOUNT

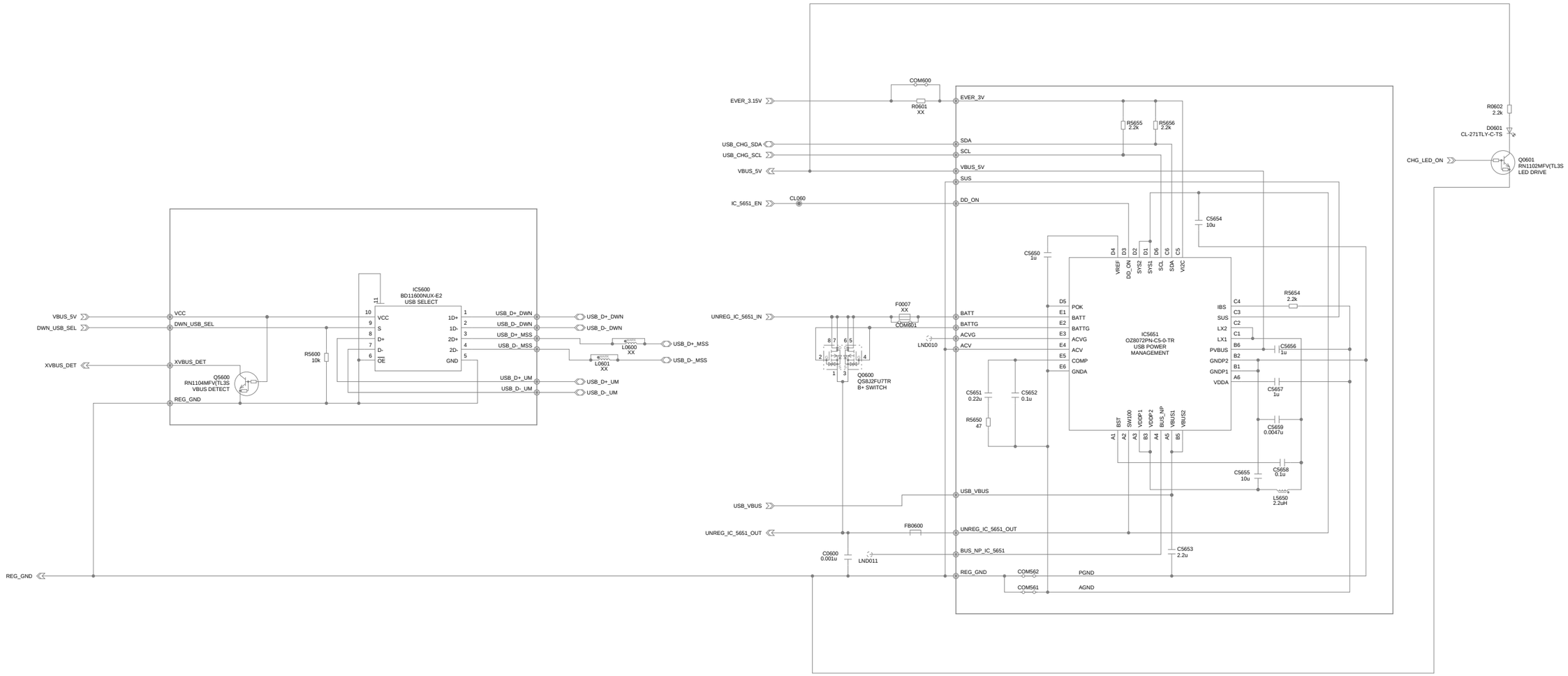

SY-1049 BOARD (7/25)

XX MARK: NO MOUNT

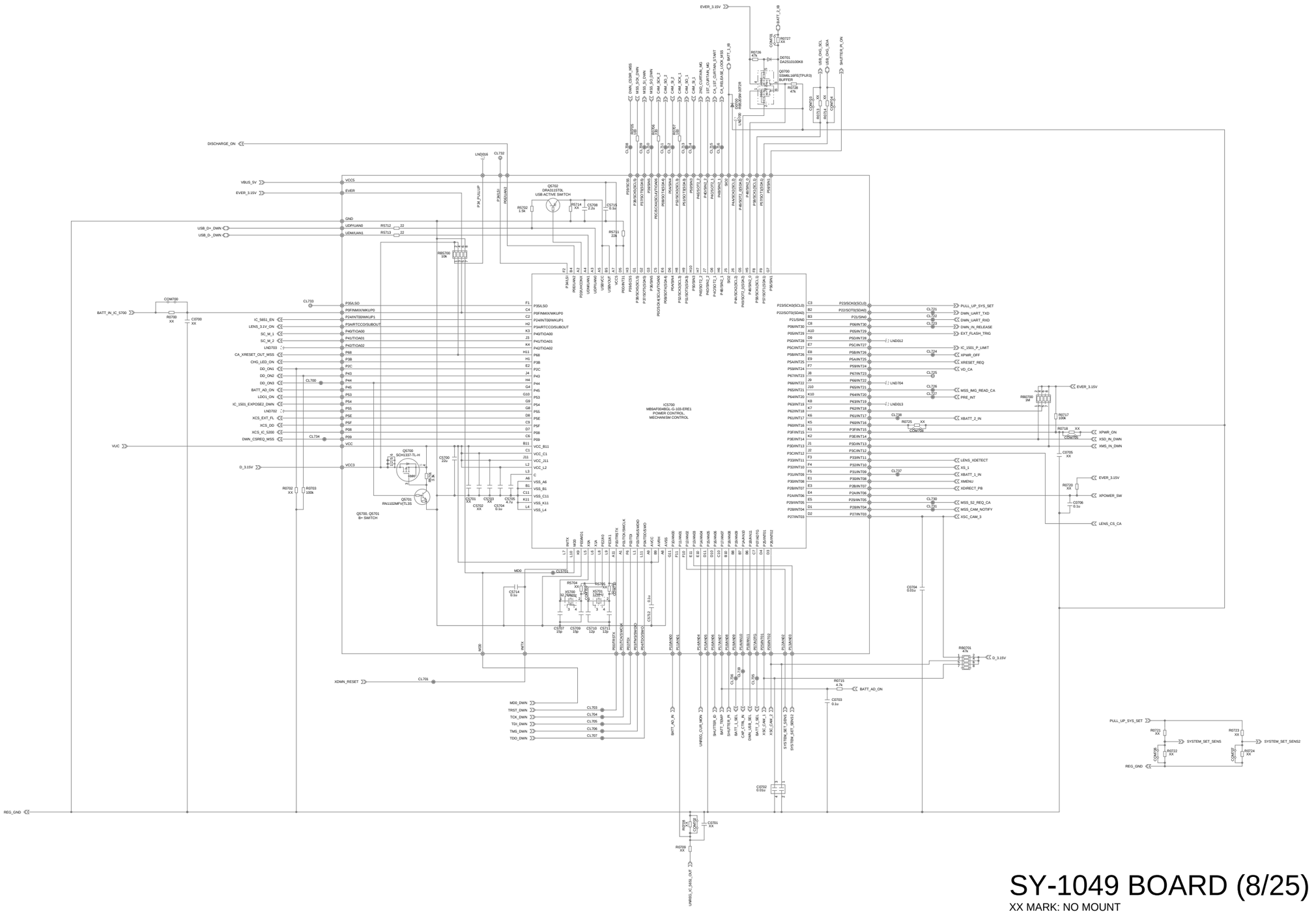

SY-1049 BOARD (8/25)

XX MARK: NO MOUNT

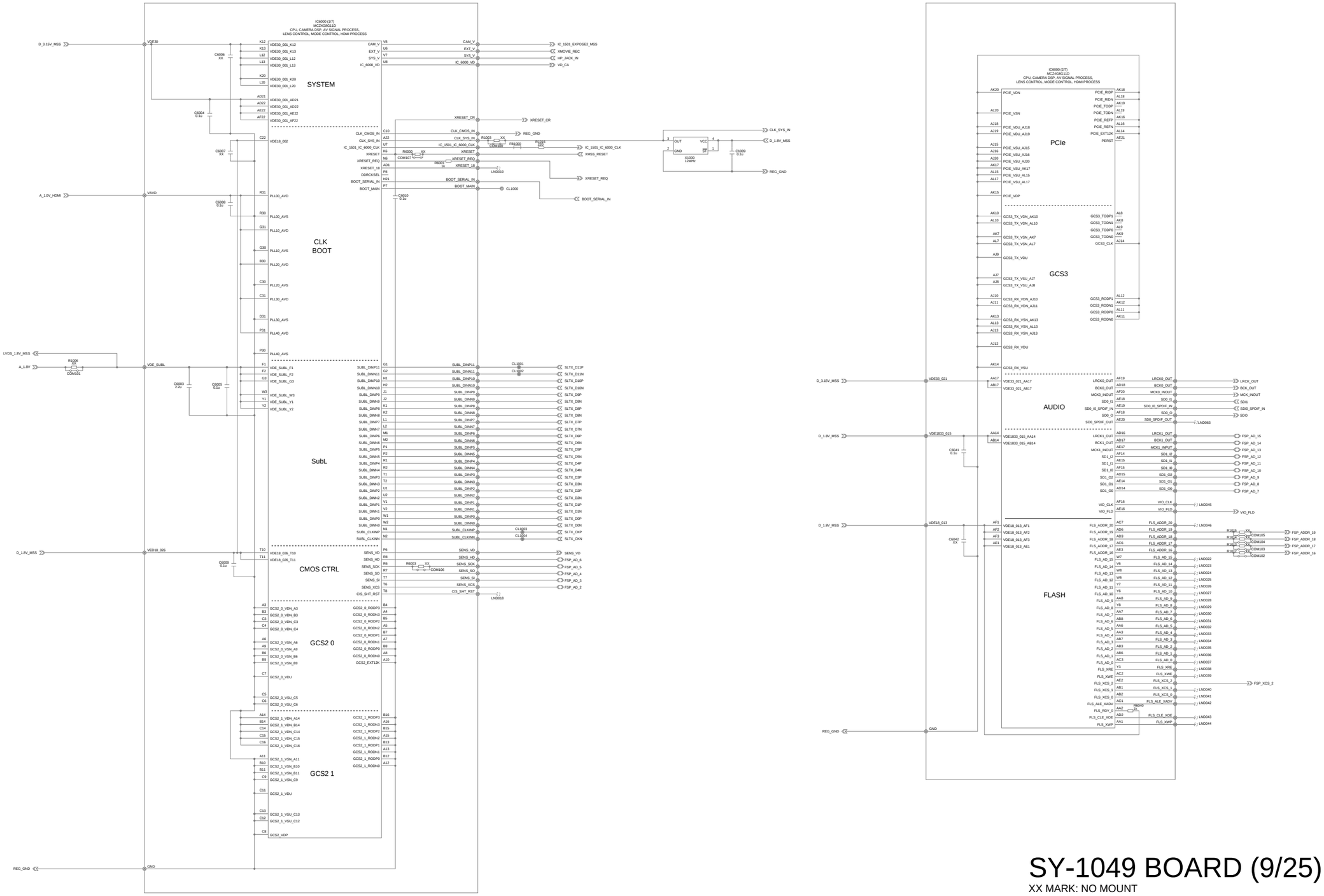

SY-1049 BOARD (9/25)

XX MARK: NO MOUNT

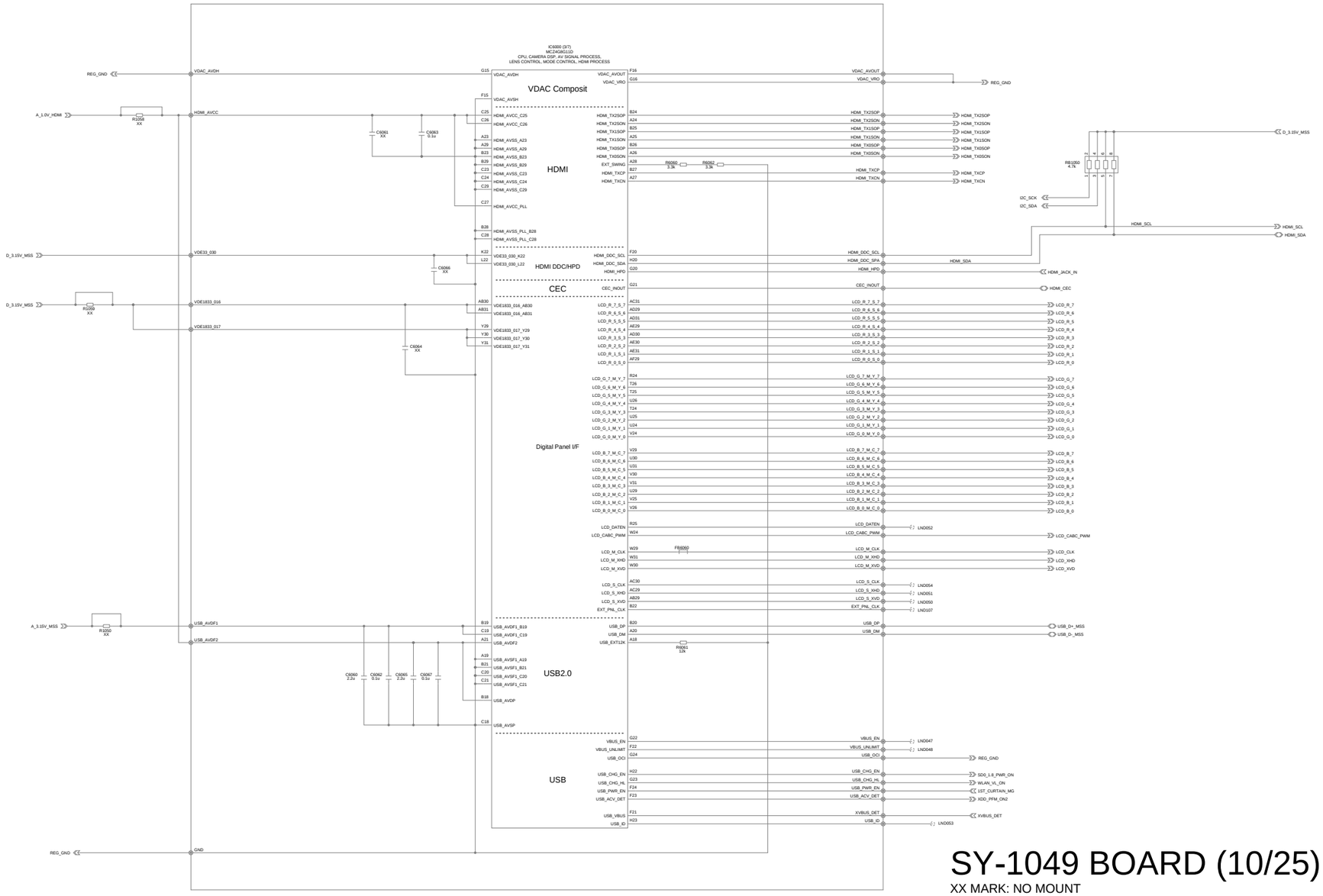

SY-1049 BOARD (10/25)

XX MARK: NO MOUNT

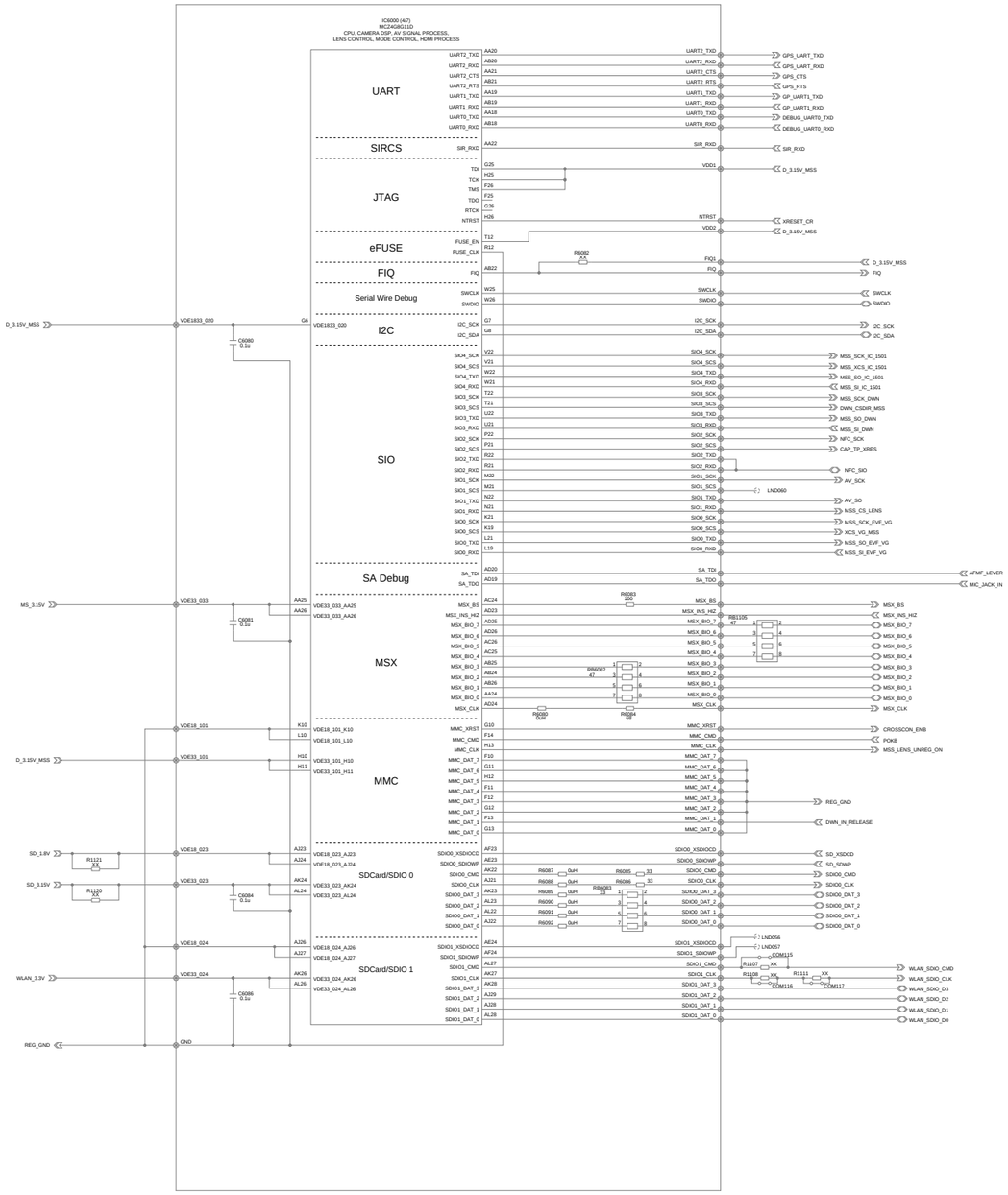

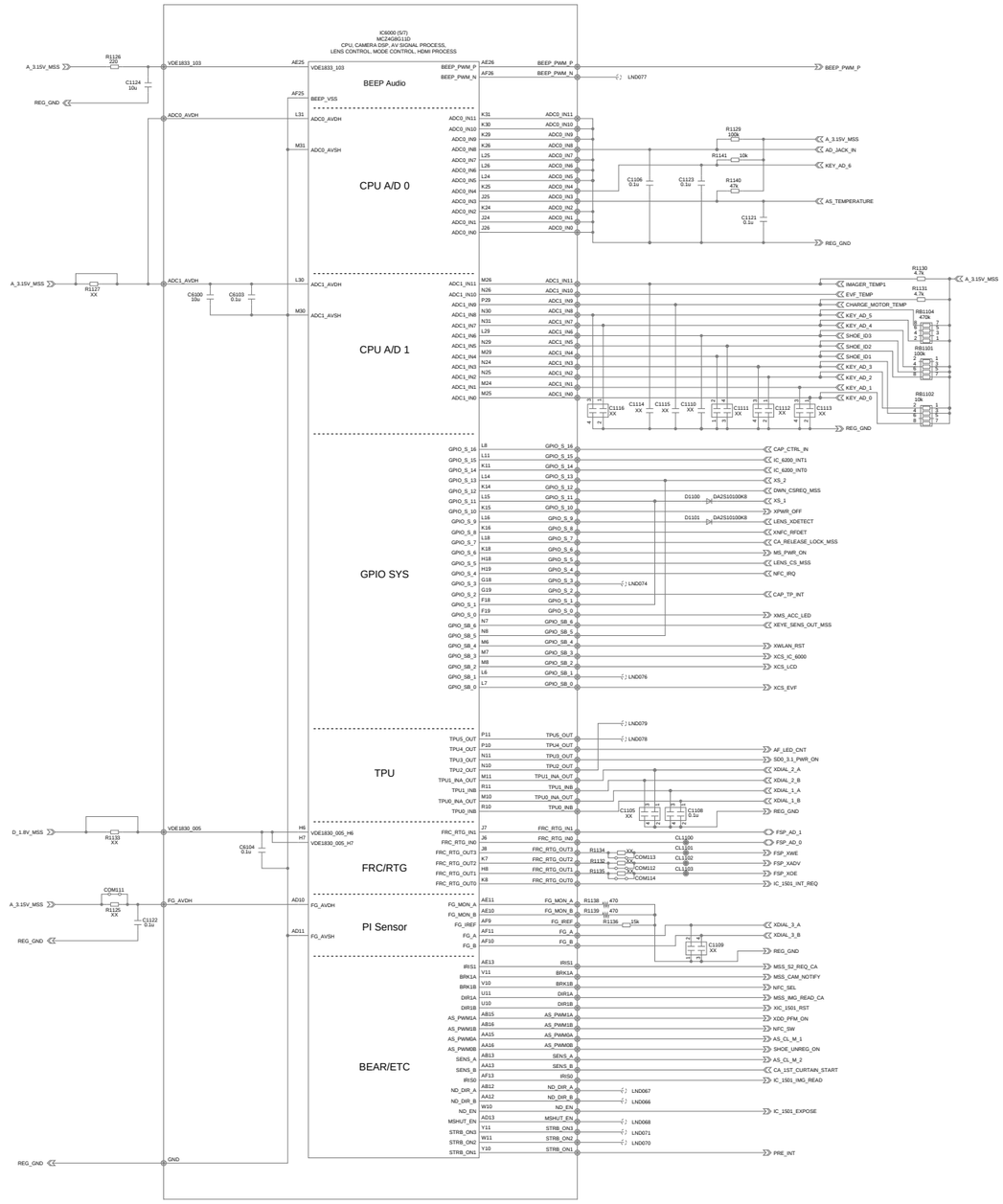

SY-1049 BOARD (11/25)

XX MARK: NO MOUNT

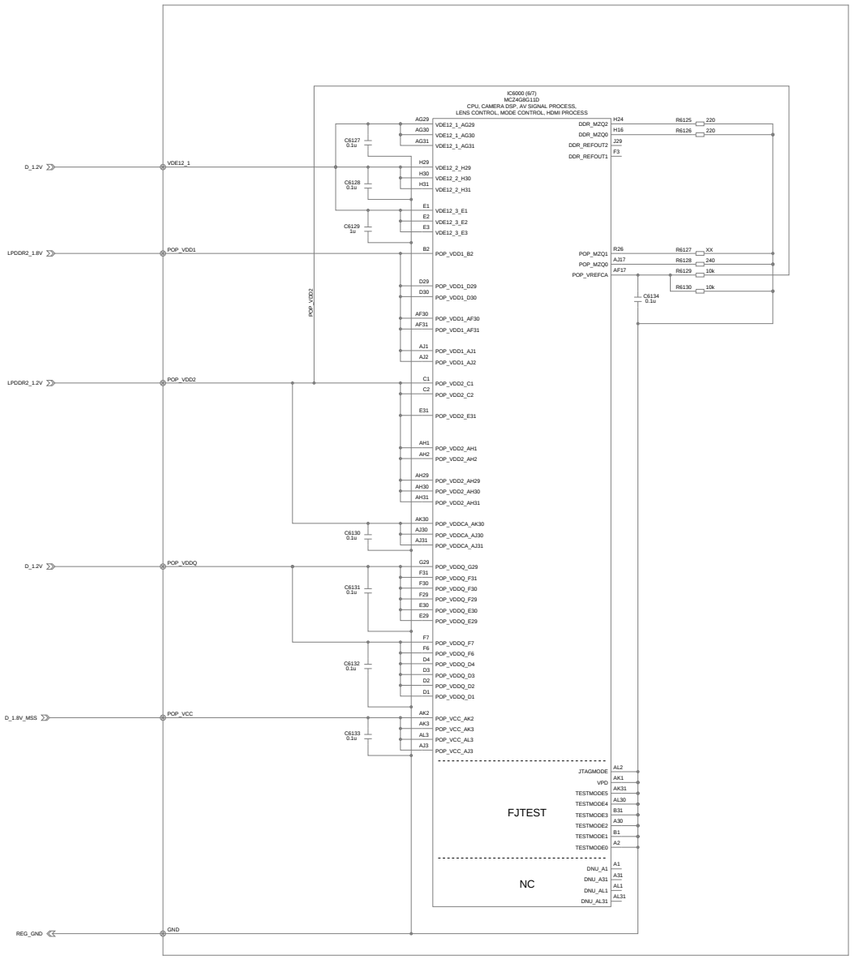

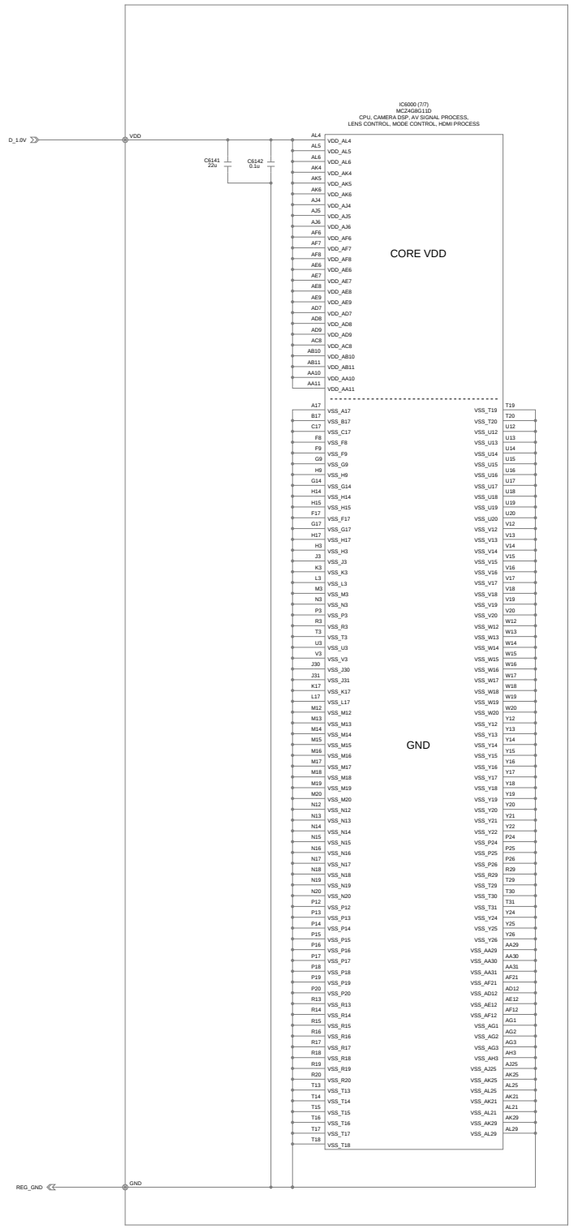

SY-1049 BOARD (12/25)

XX MARK: NO MOUNT

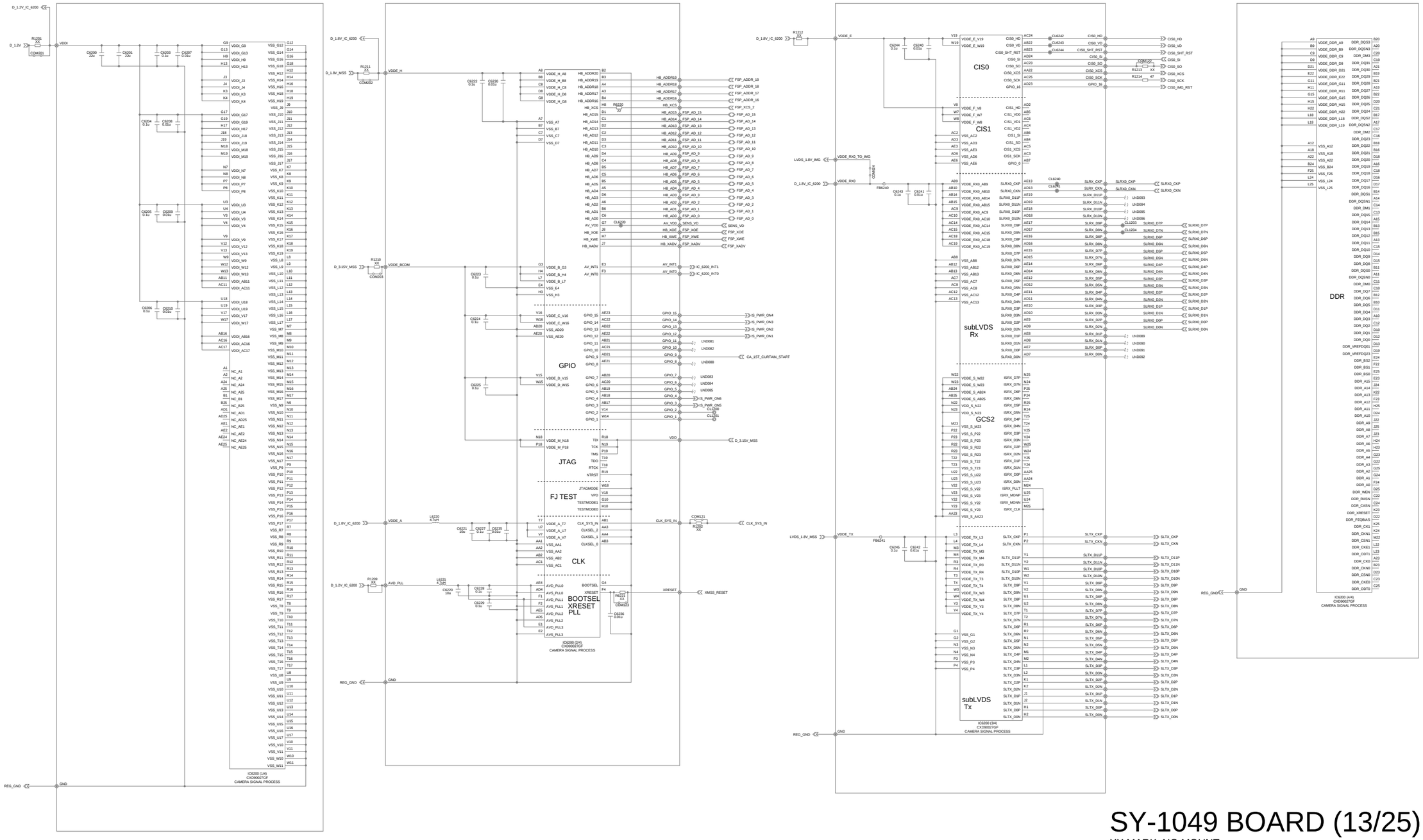

SY-1049 BOARD (13/25)

XX MARK: NO MOUNT

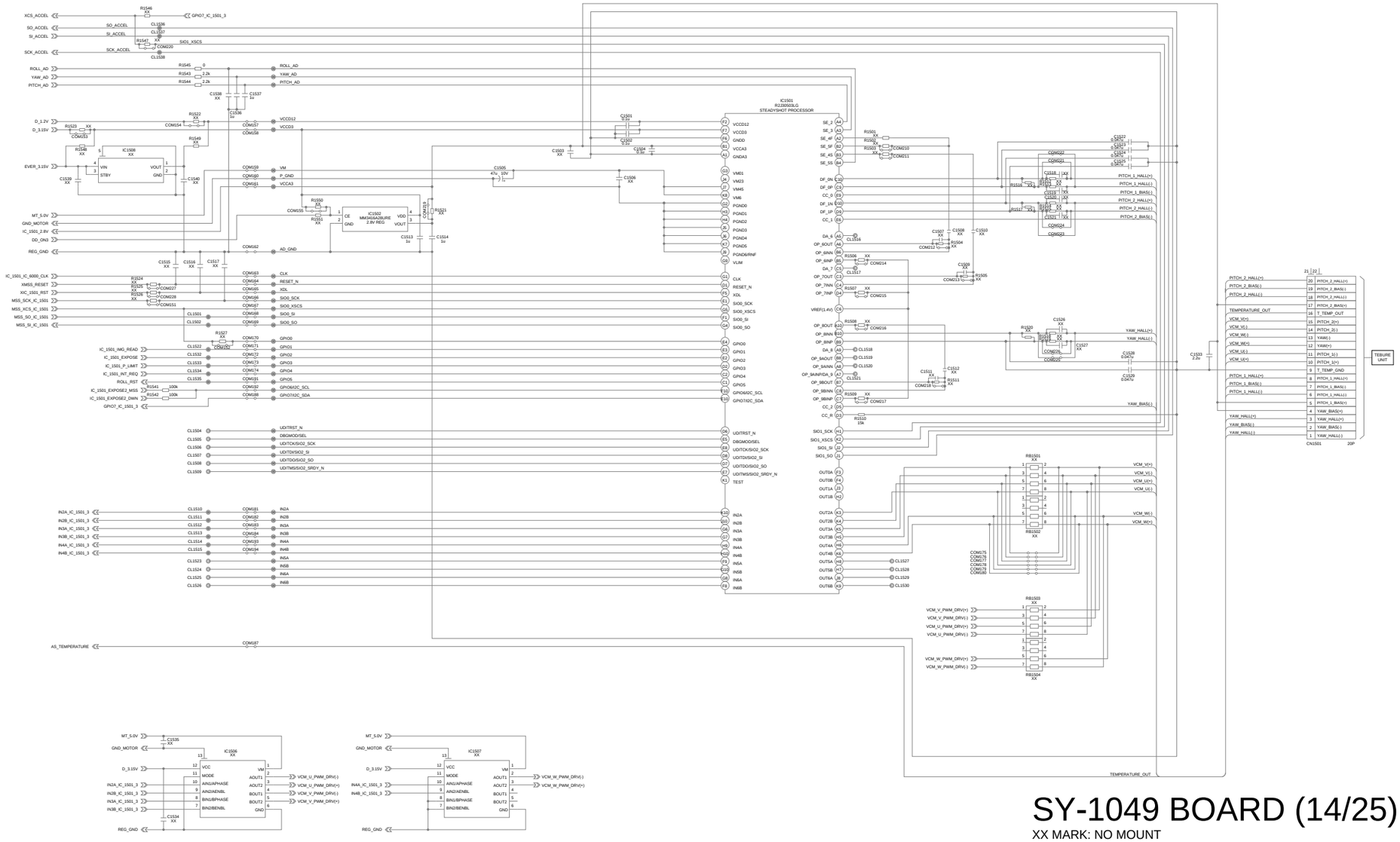

SY-1049 BOARD (14/25)

XX MARK: NO MOUNT

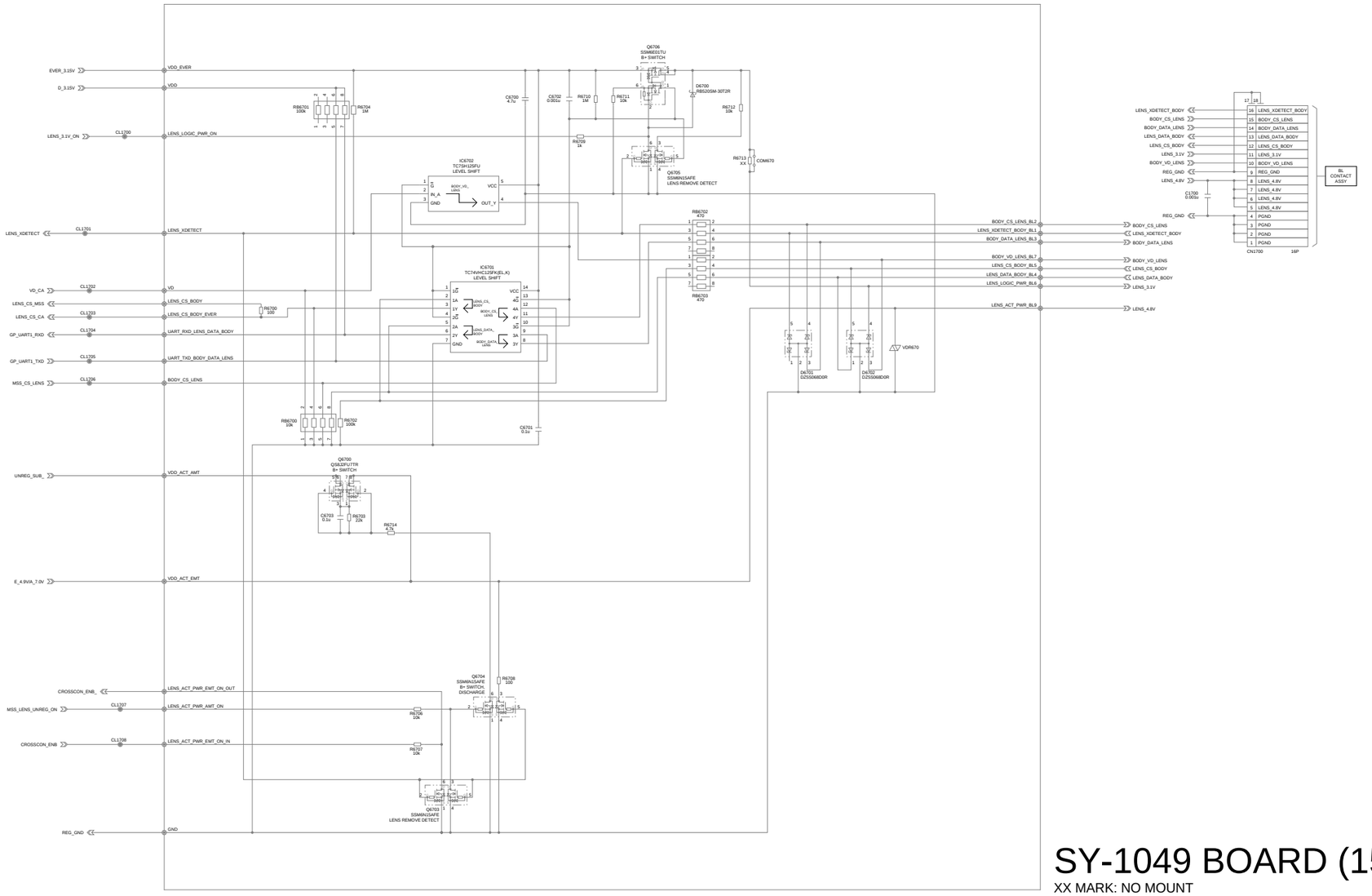

SY-1049 BOARD (15/25)

XX MARK: NO MOUNT

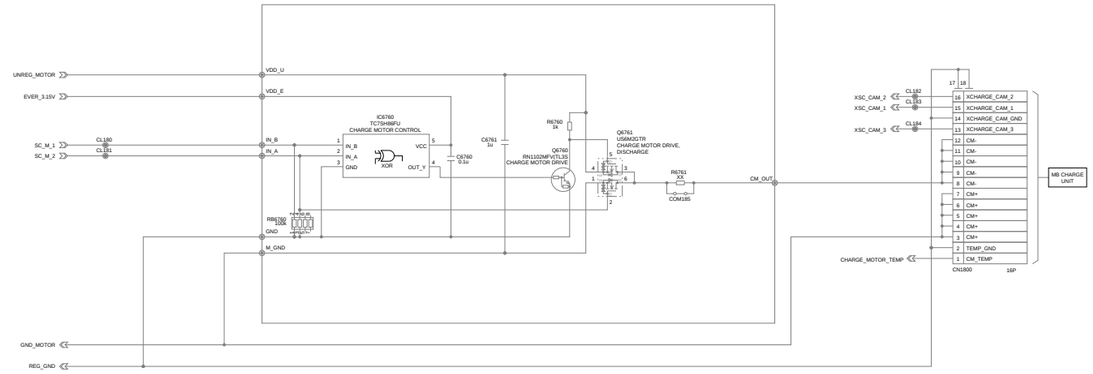

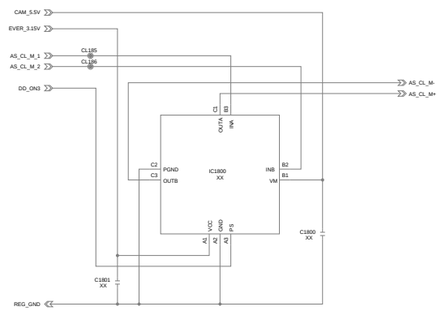

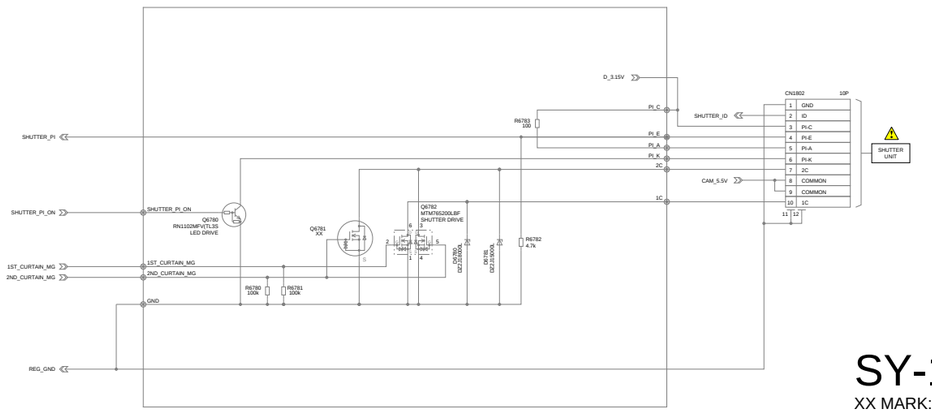

SY-1049 BOARD (16/25)

XX MARK: NO MOUNT

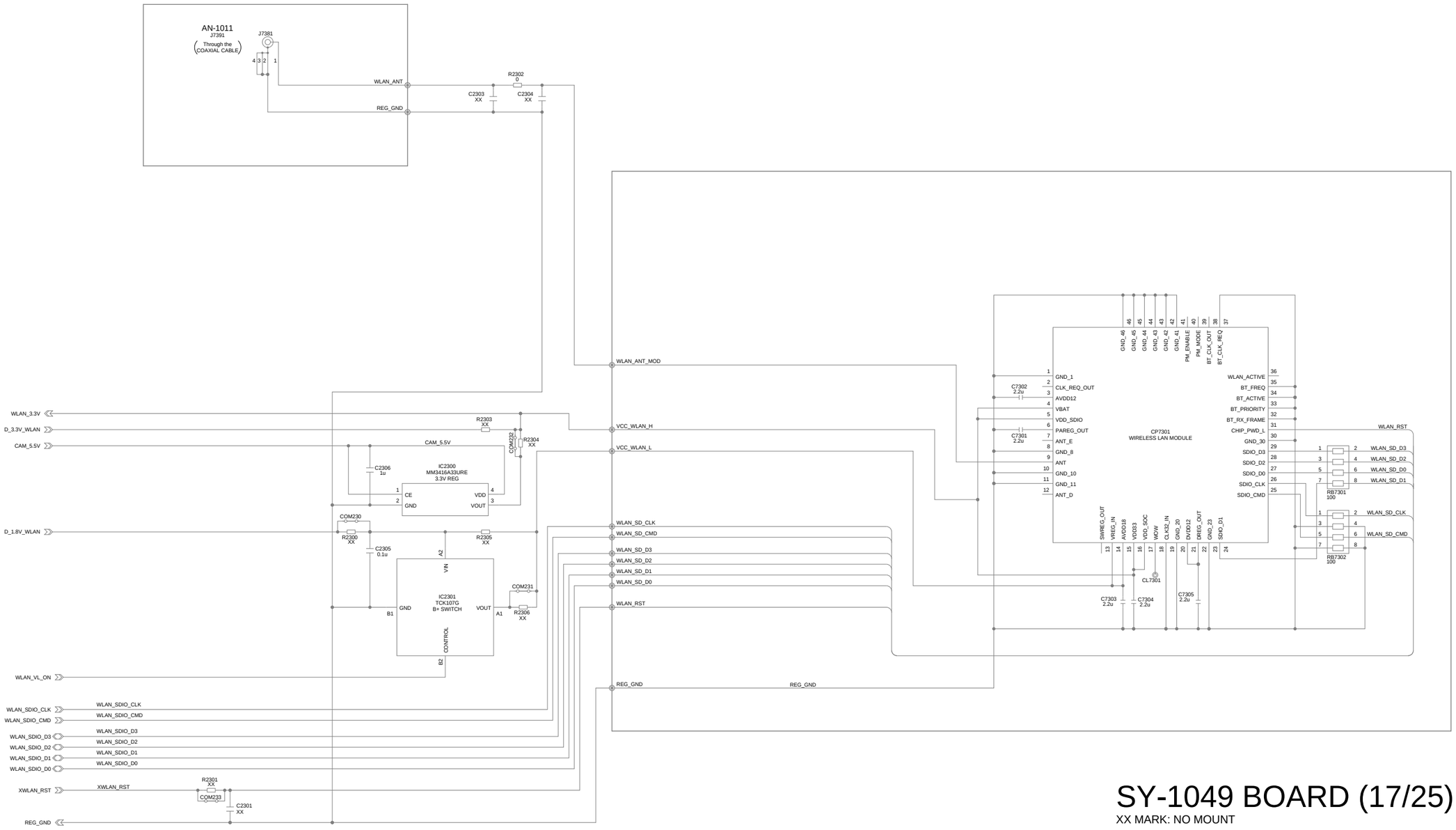

SY-1049 BOARD (17/25)

XX MARK: NO MOUNT

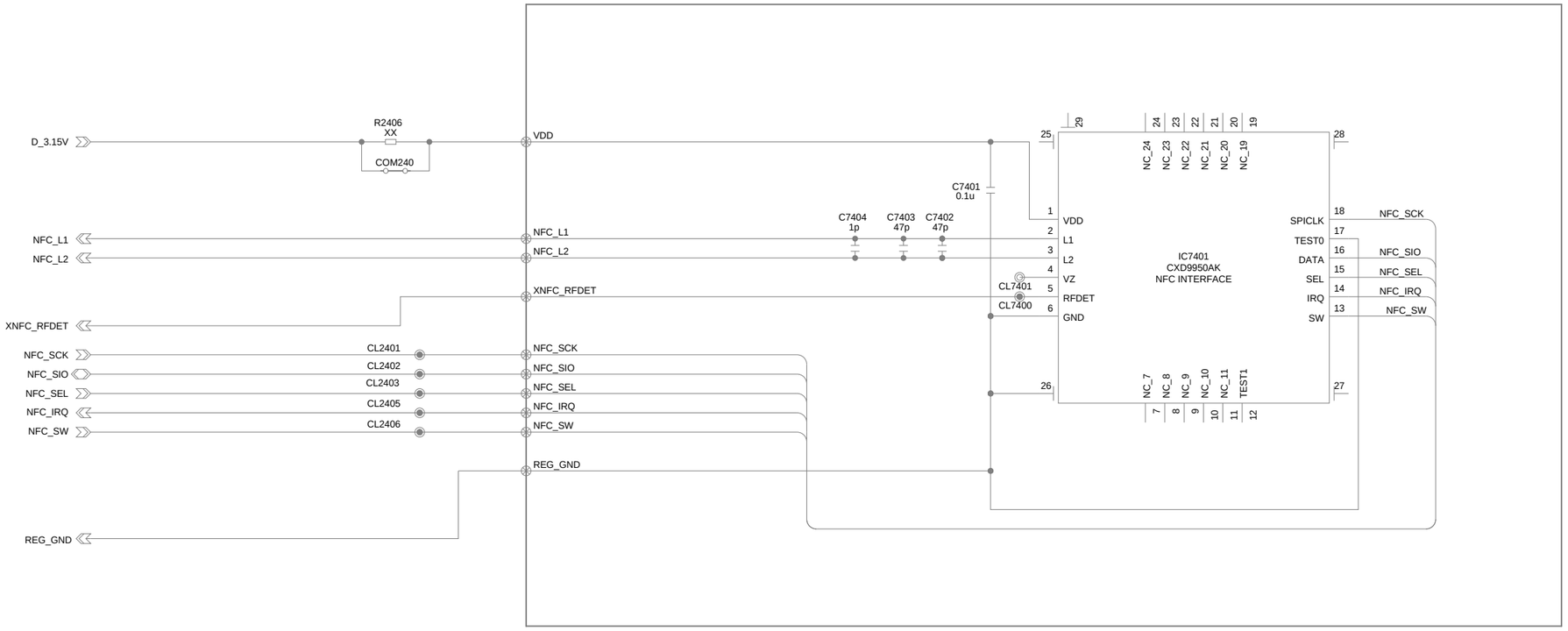

SY-1049 BOARD (18/25)

XX MARK: NO MOUNT

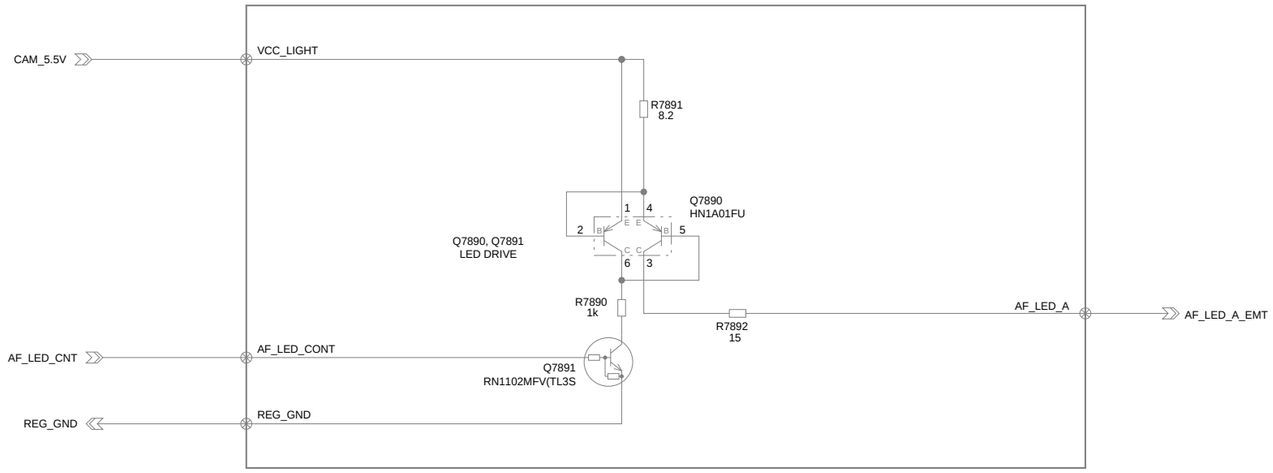

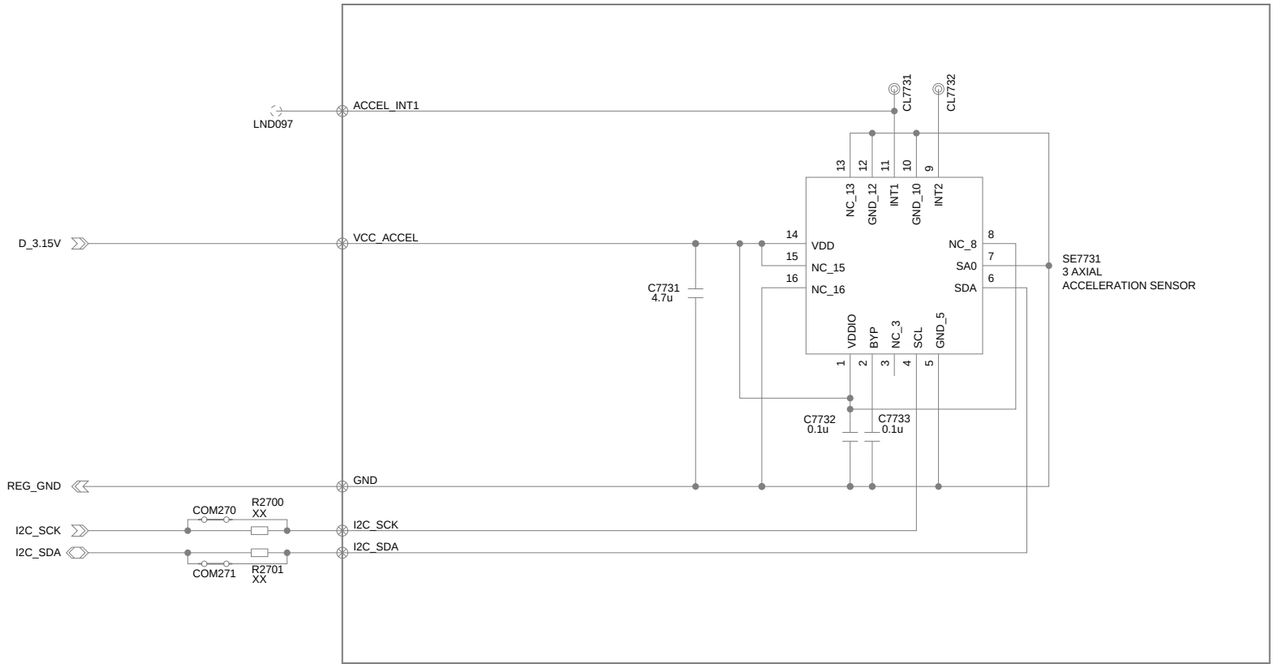

SY-1049 BOARD (19/25)

XX MARK: NO MOUNT

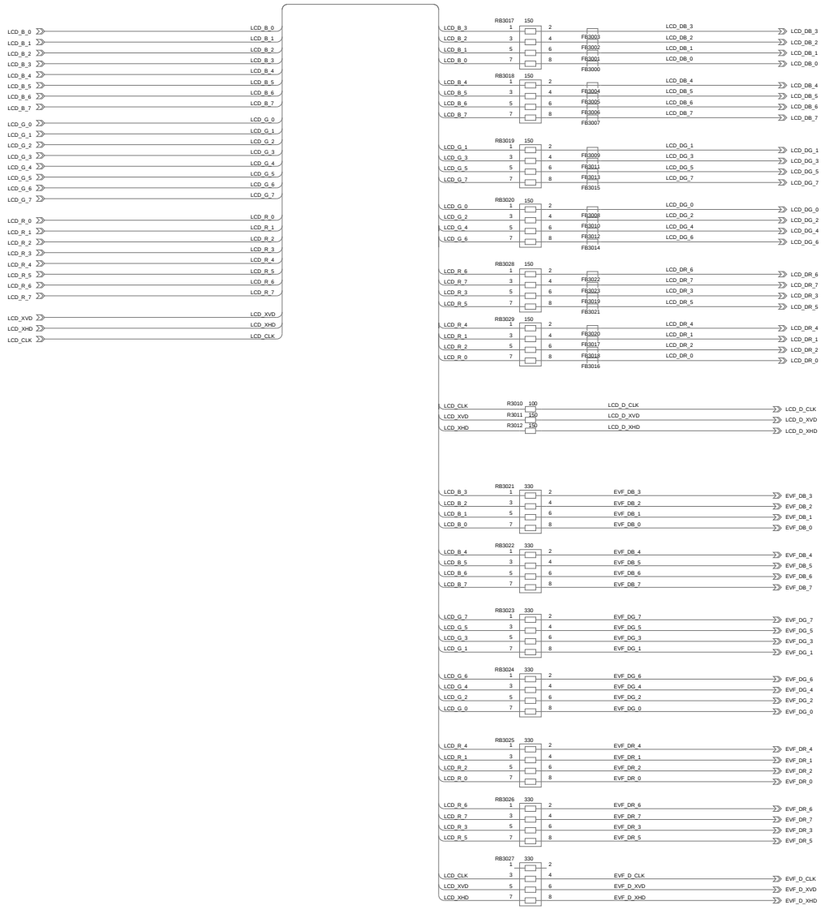

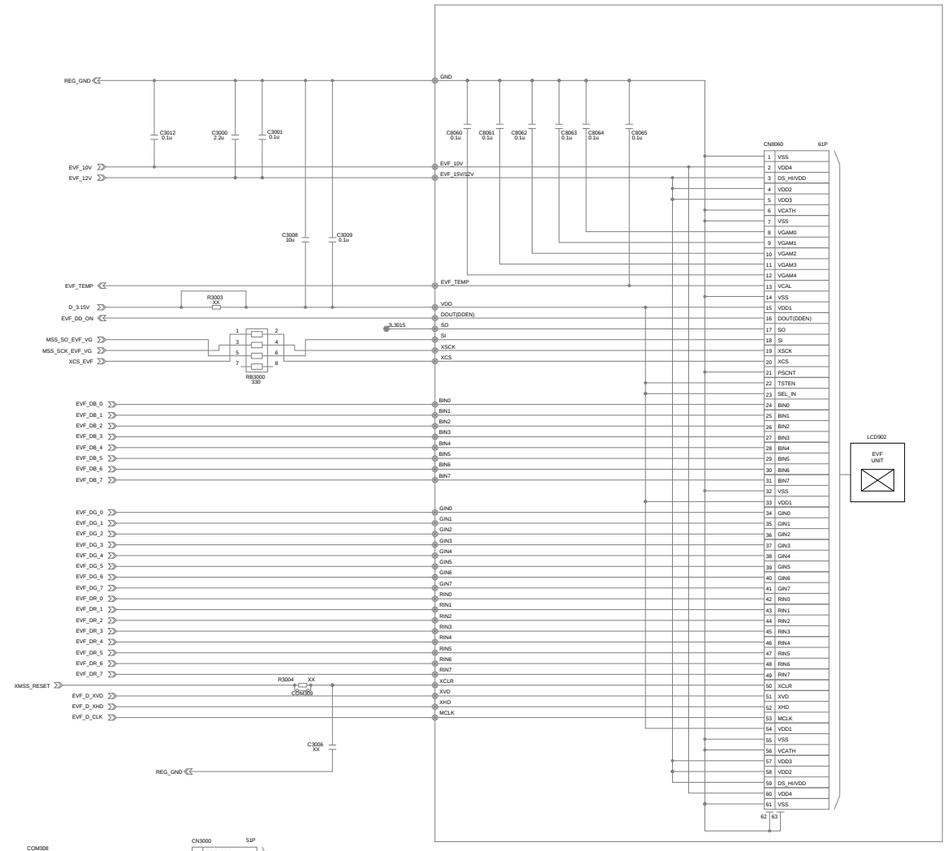

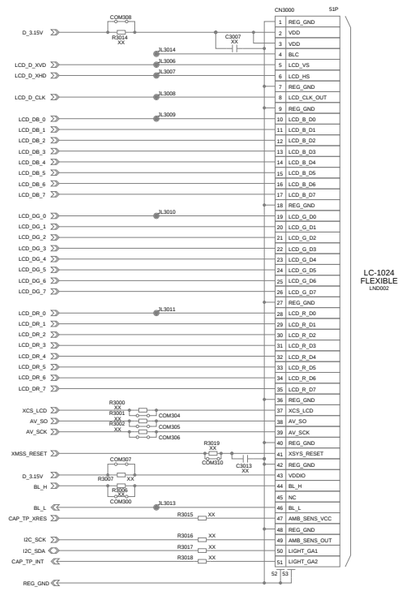

SY-1049 BOARD (20/25)

XX MARK: NO MOUNT

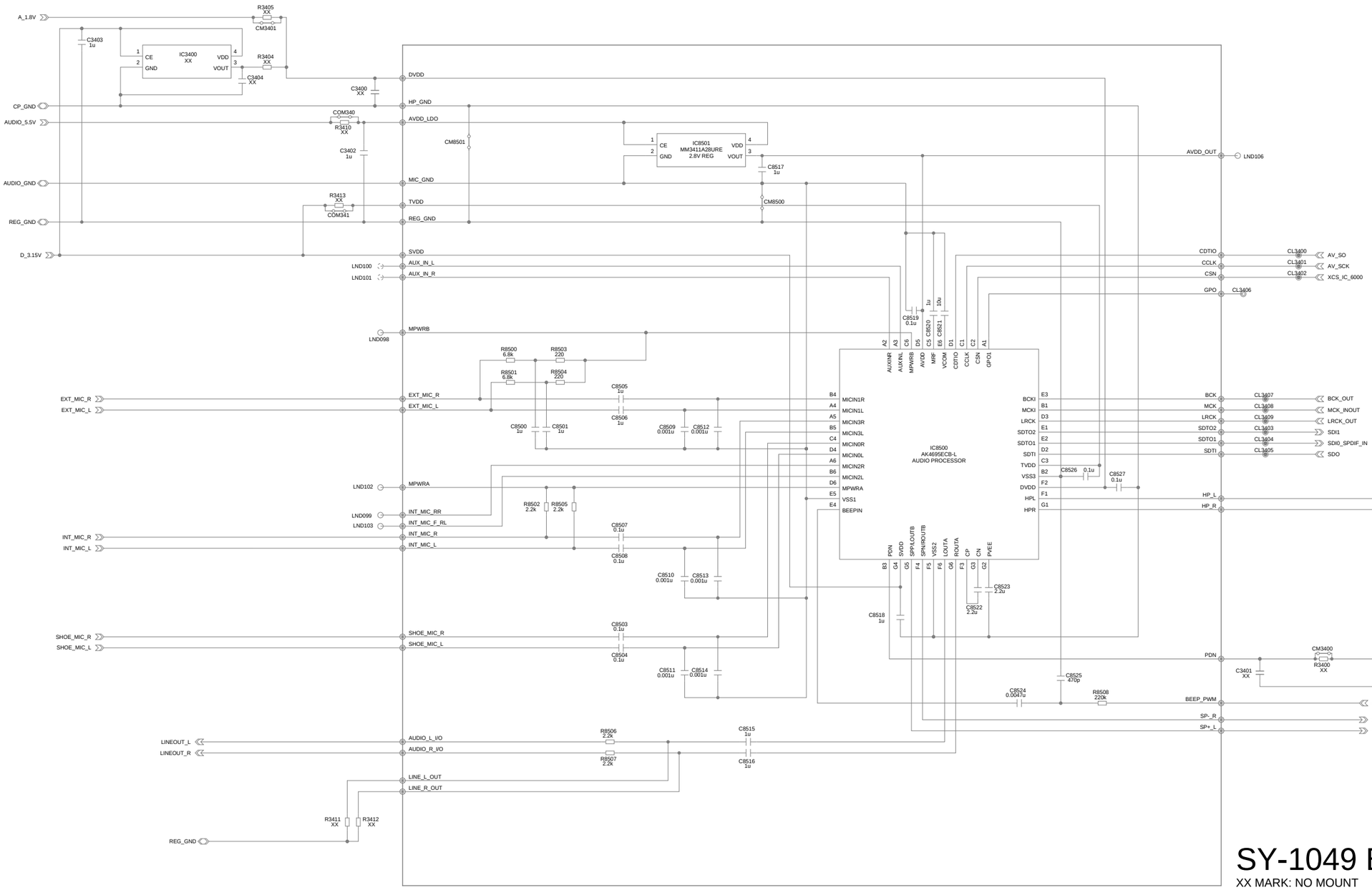

SY-1049 BOARD (21/25)

XX MARK: NO MOUNT

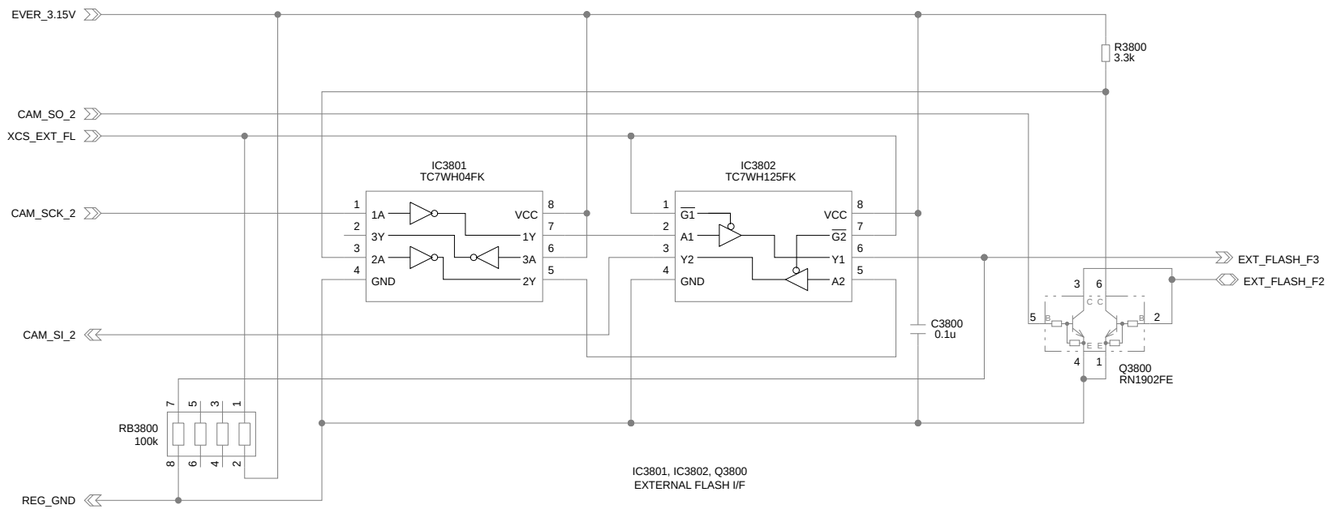

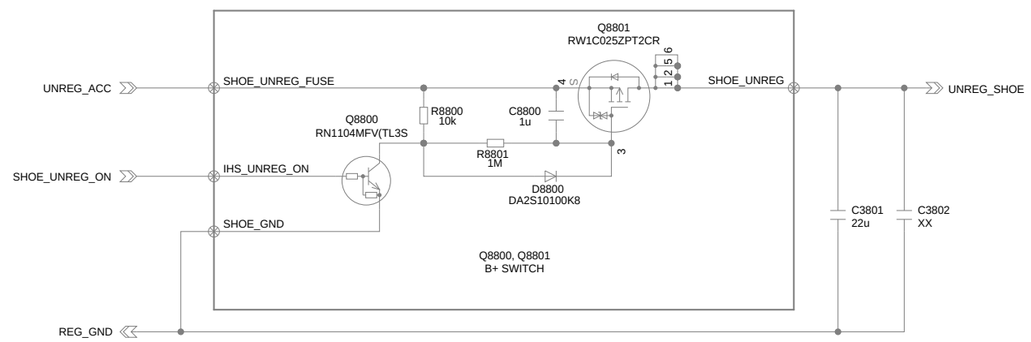

SY-1049 BOARD (22/25)

XX MARK: NO MOUNT

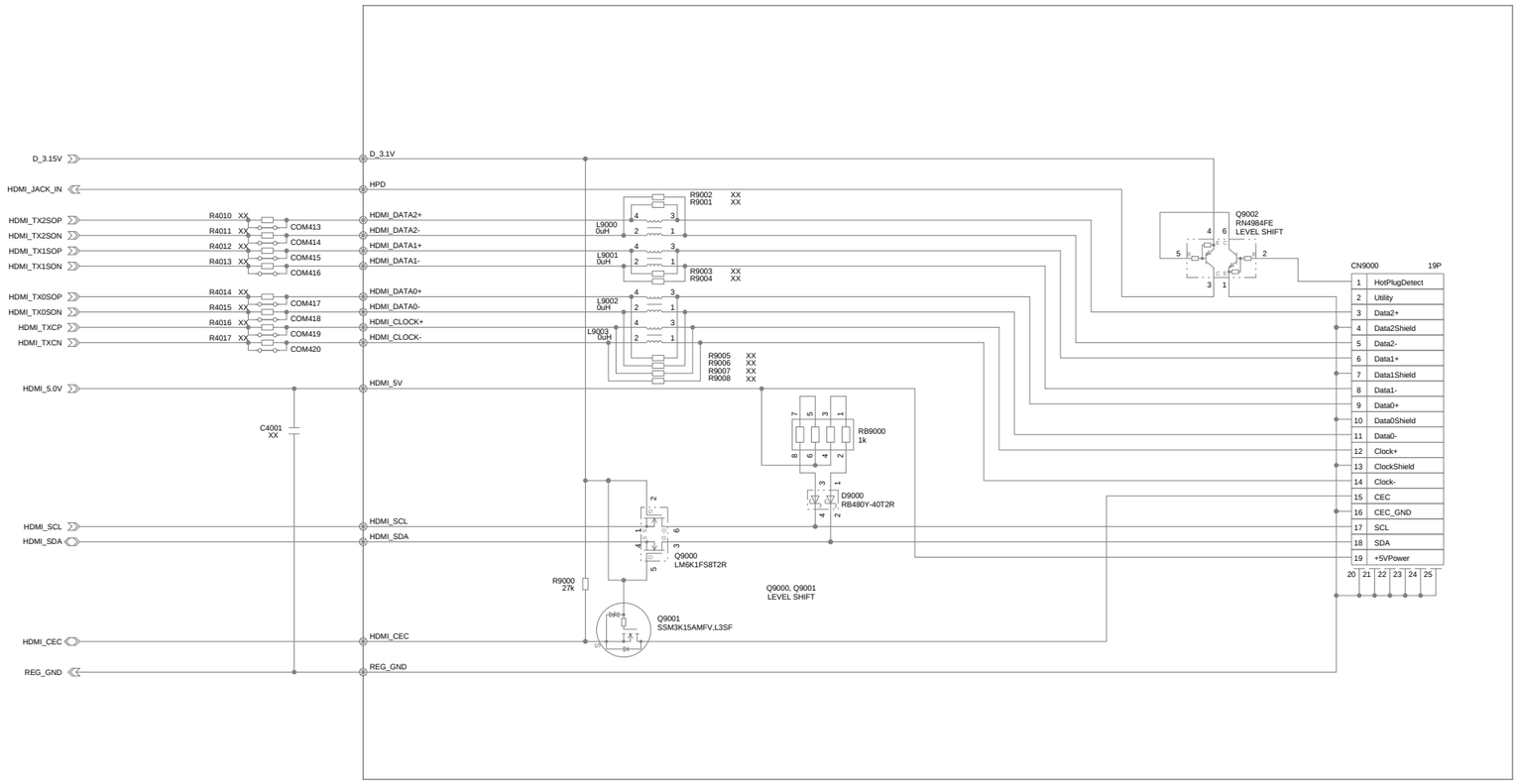

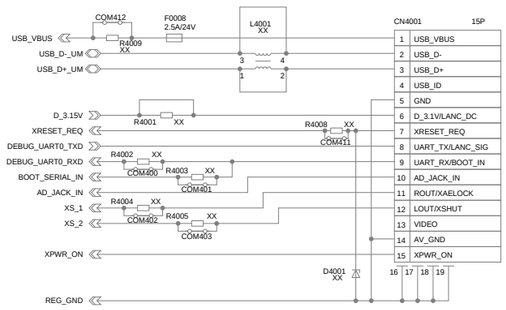

SY-1049 BOARD (23/25)

XX MARK: NO MOUNT

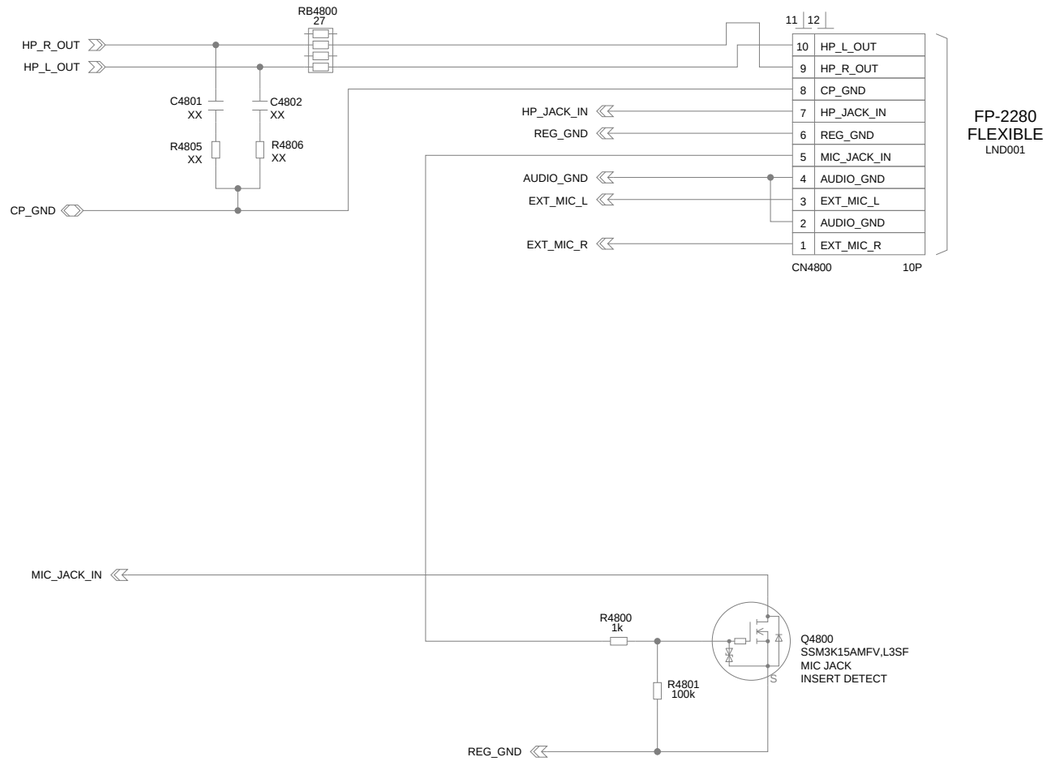

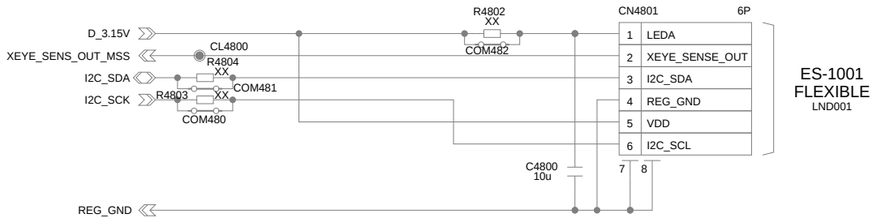

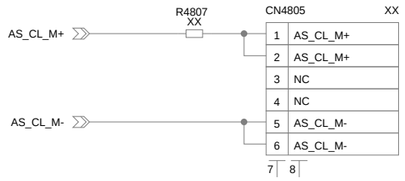

SY-1049 BOARD (24/25)

XX MARK: NO MOUNT

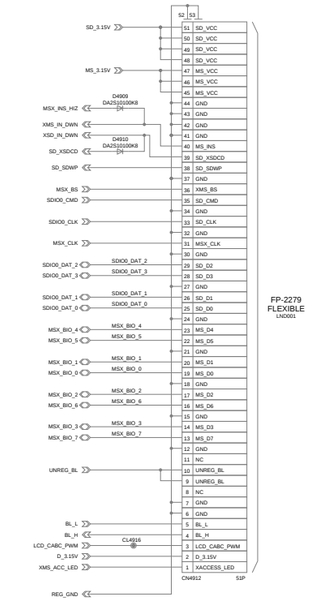

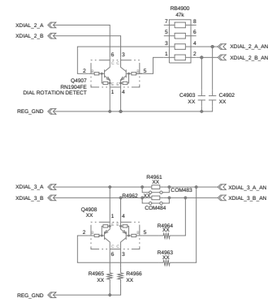

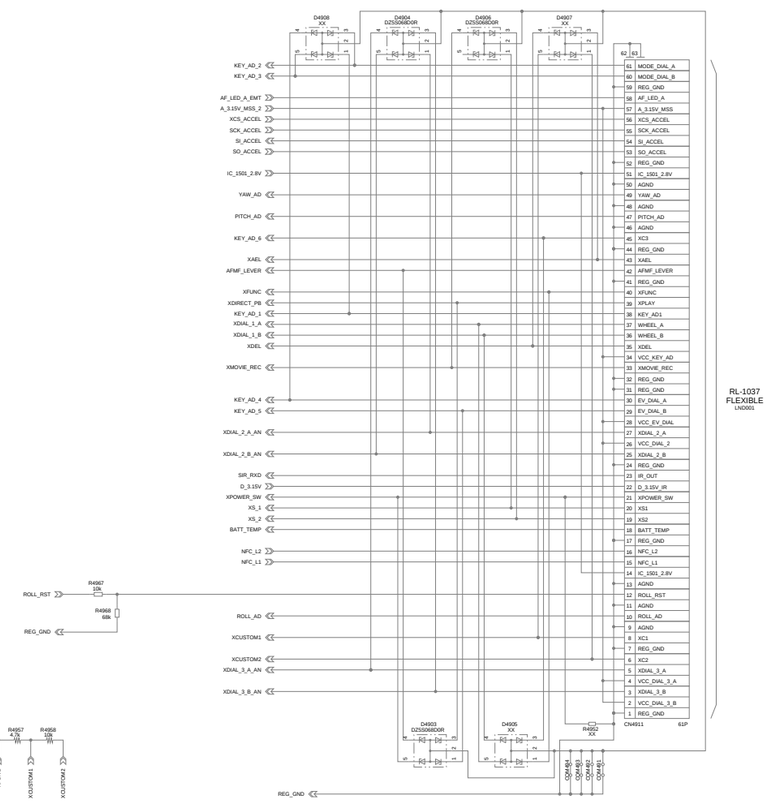

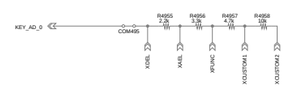

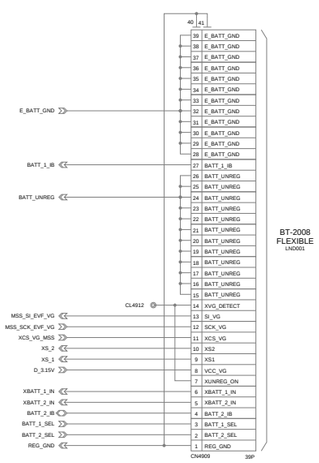

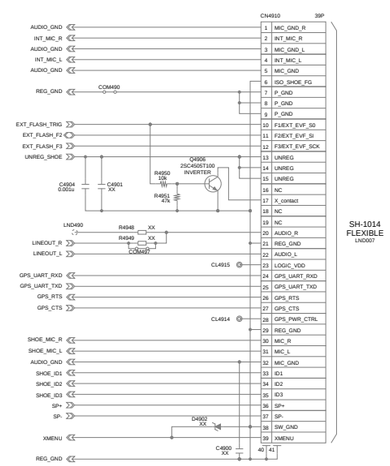

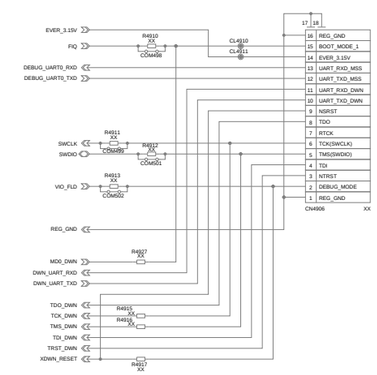

SY-1049 BOARD (25/25)

XX MARK: NO MOUNT

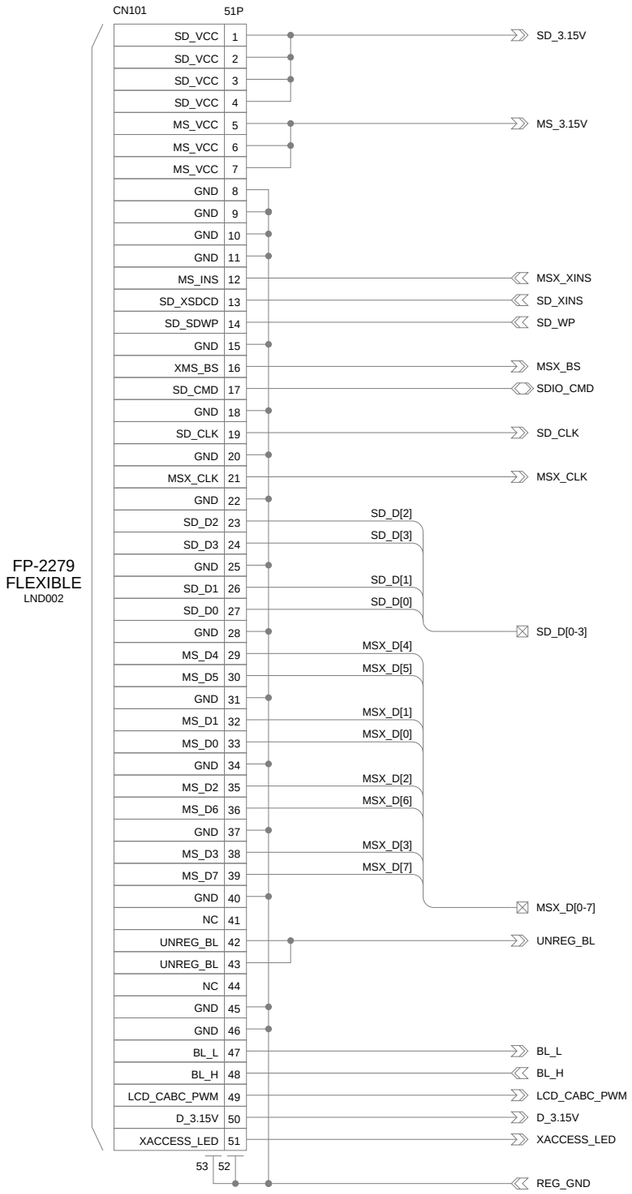

CN-1032 BOARD (1/3)

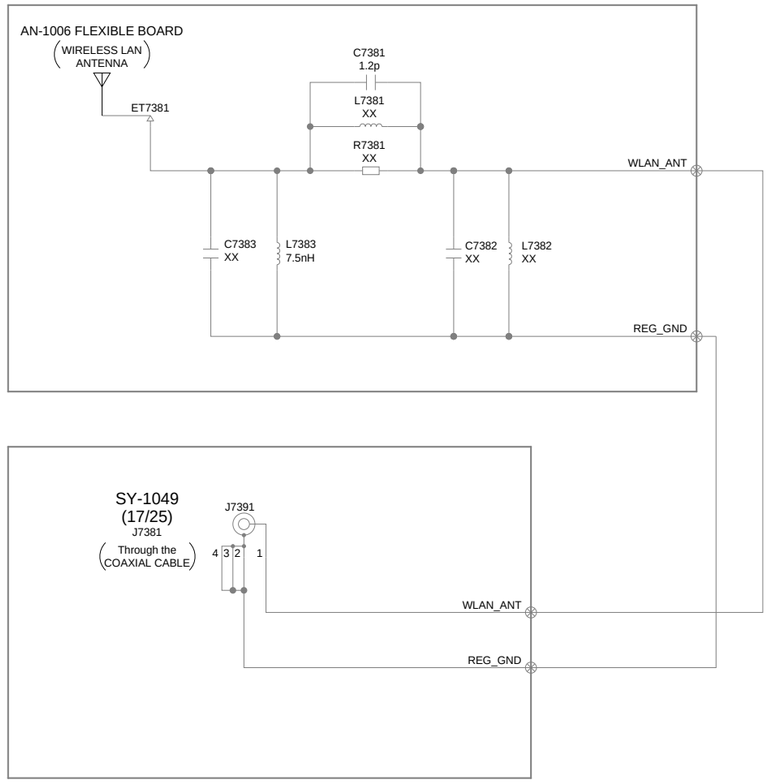

AN-1011 BOARD

XX MARK: NO MOUNT

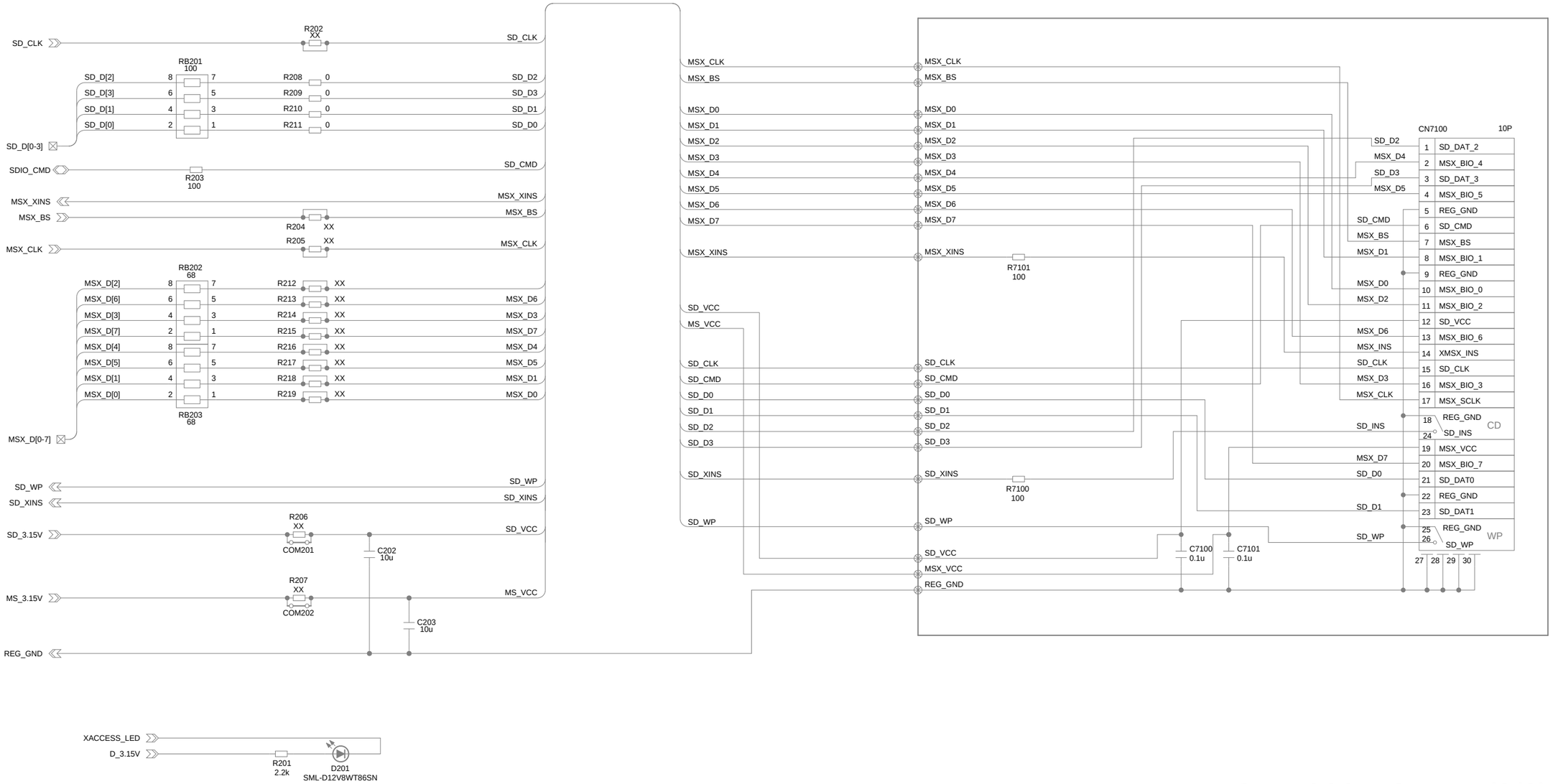

CN-1032 BOARD (2/3)

XX MARK: NO MOUNT

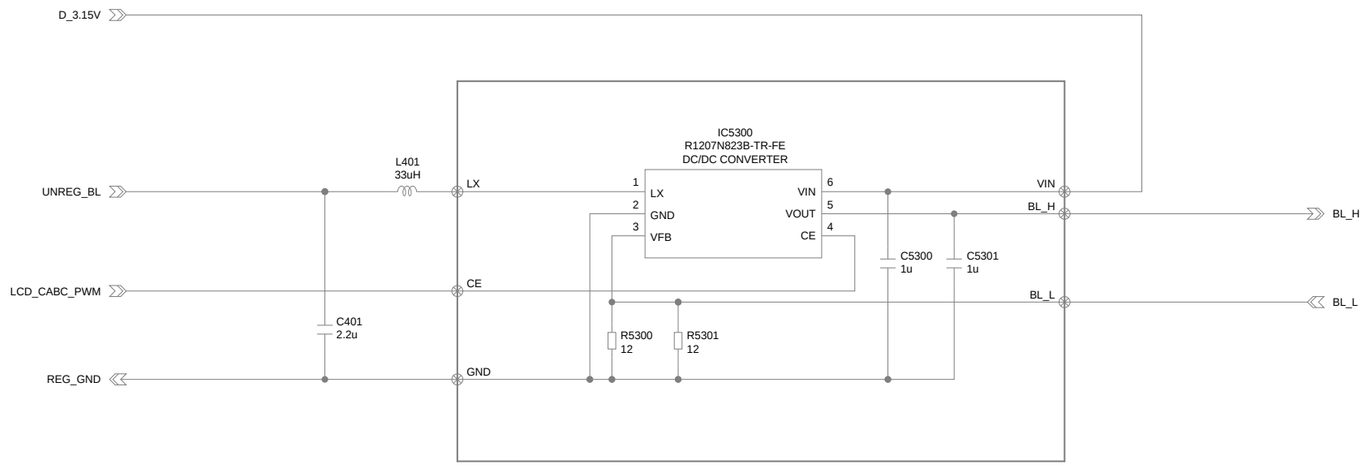

CN-1032 BOARD (3/3)

XX MARK: NO MOUNT

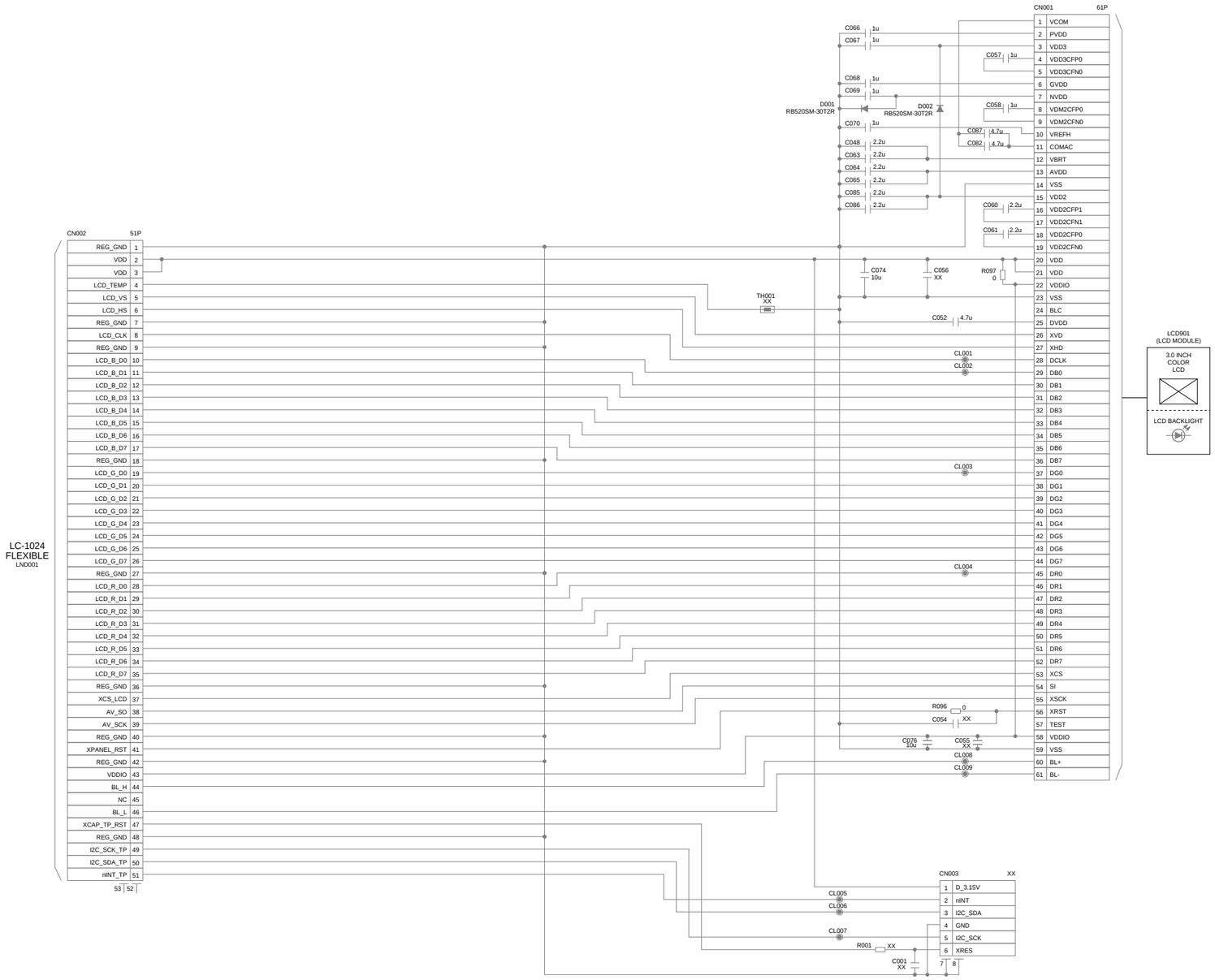

LC-1023 BOARD

XX MARK: NO MOUNT

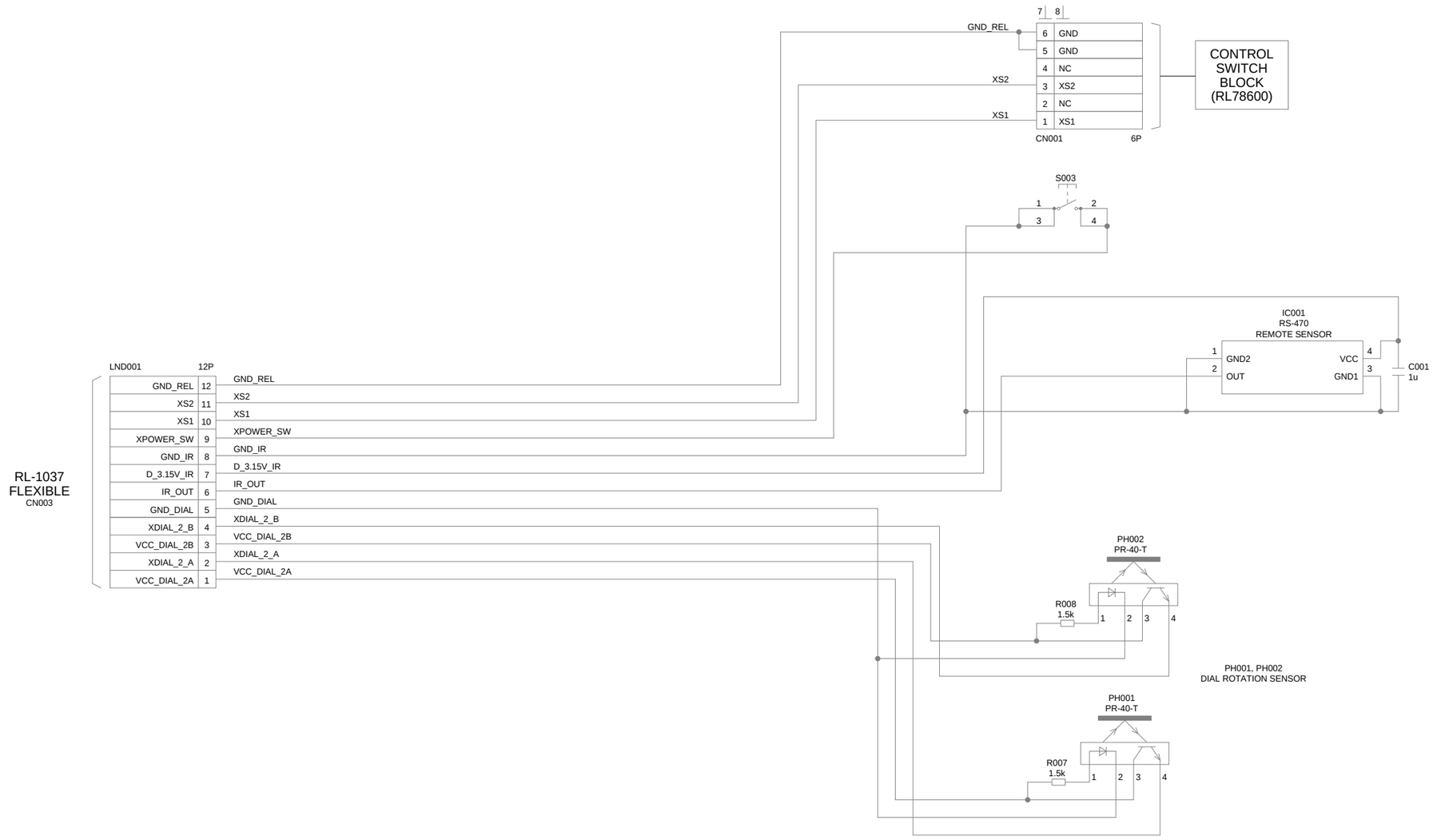

DL-1003 FLEXIBLE BOARD

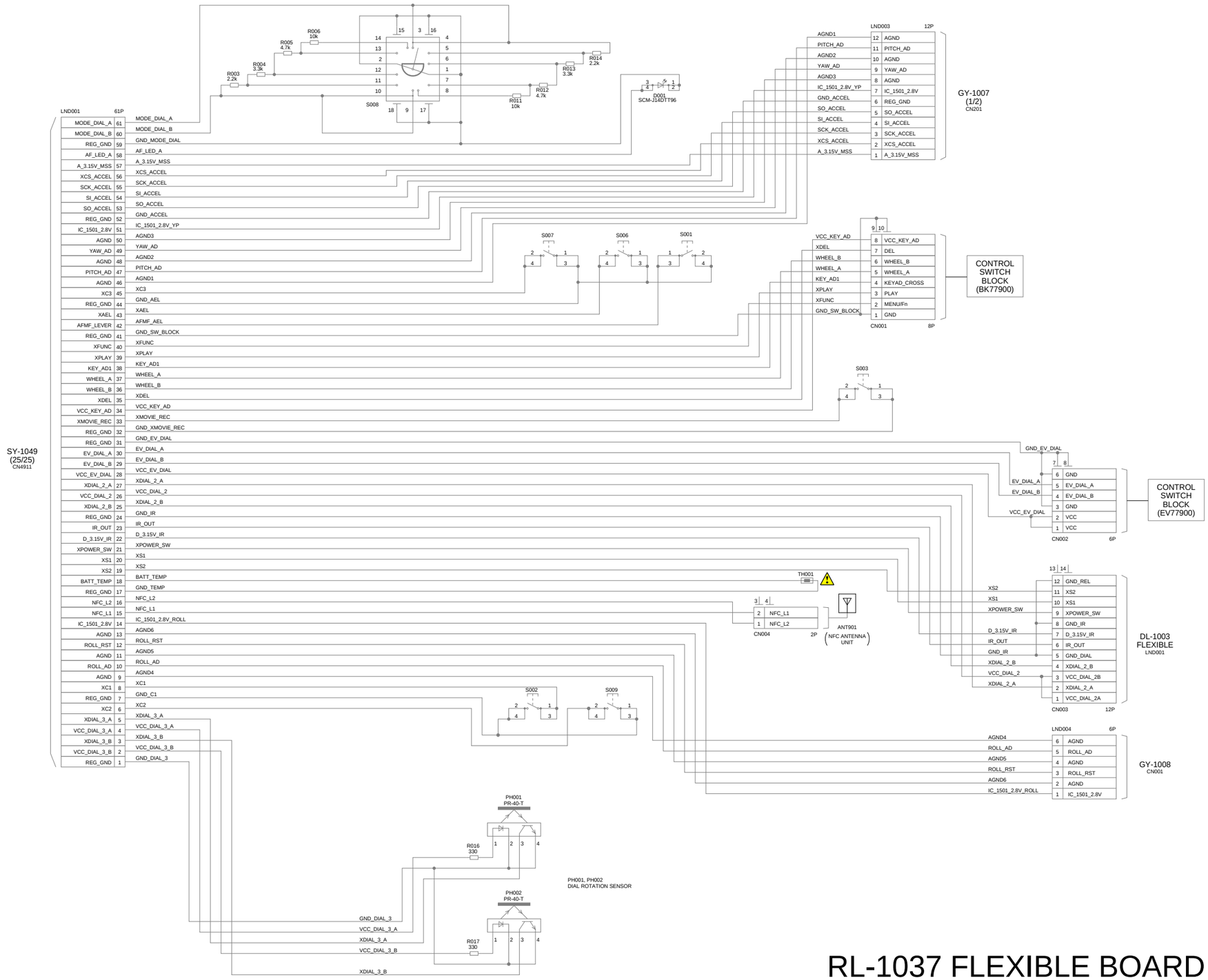

RL-1037 FLEXIBLE BOARD

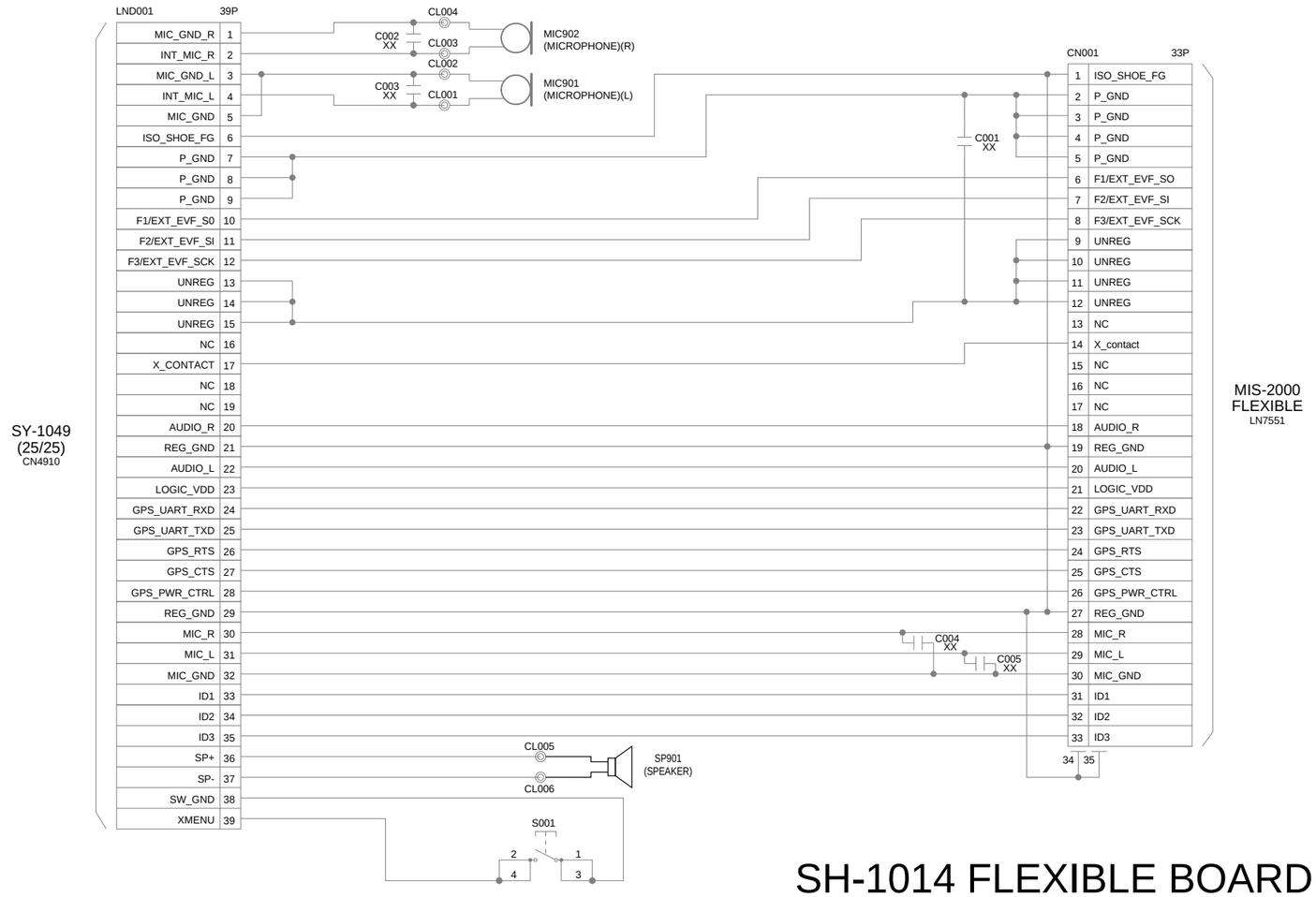

SH-1014 FLEXIBLE BOARD

XX MARK: NO MOUNT

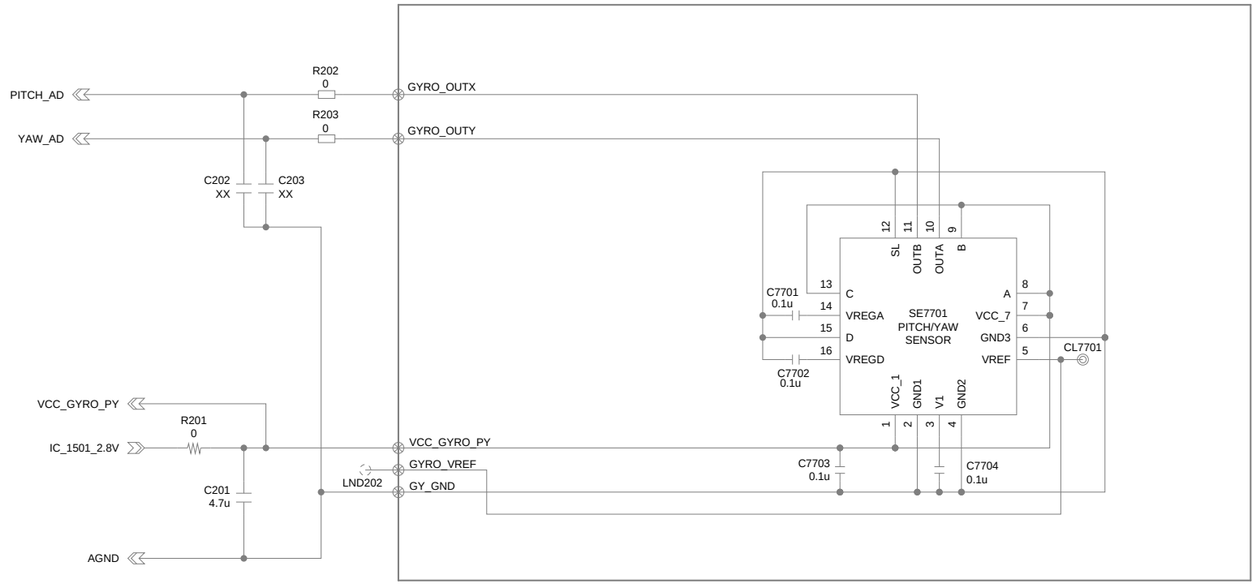

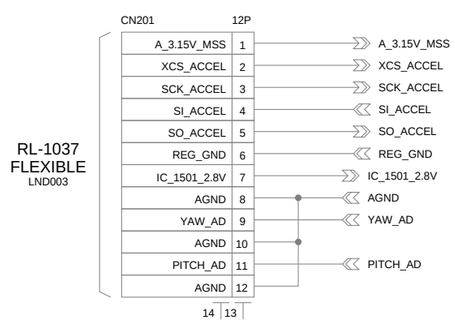

GY-1007 BOARD (1/2)

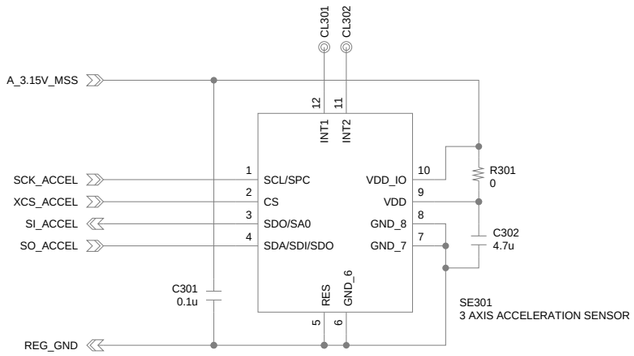

GY-1007 BOARD (2/2)

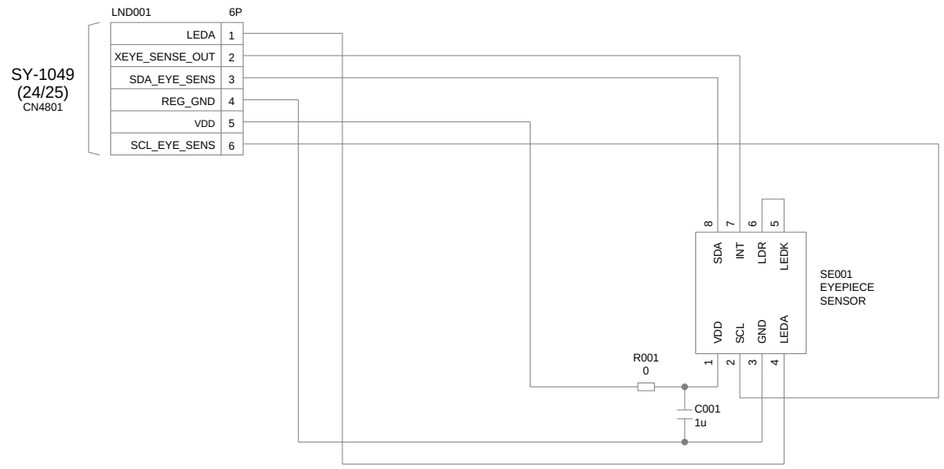

ES-1001 FLEXIBLE BOARD

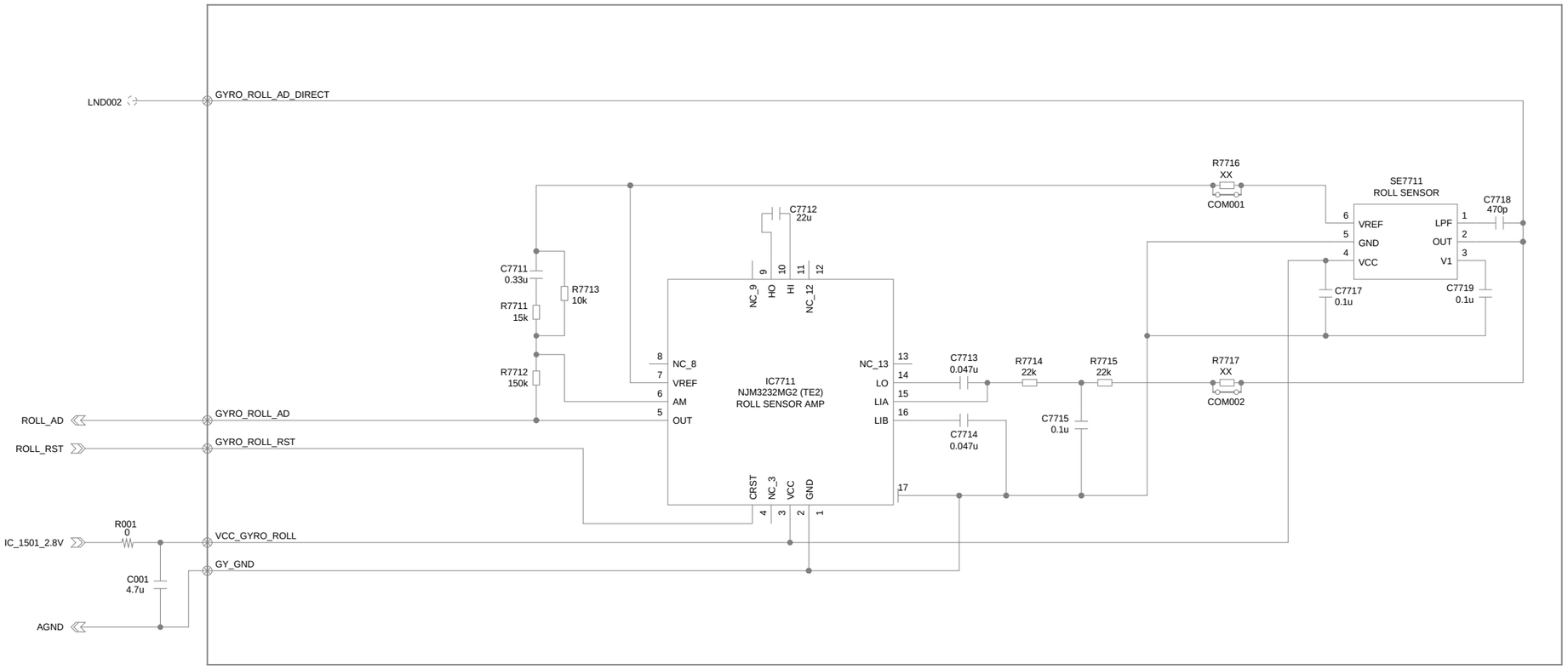

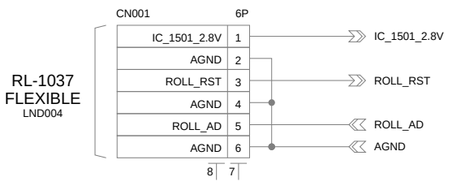

GY-1008 BOARD

XX MARK: NO MOUNT

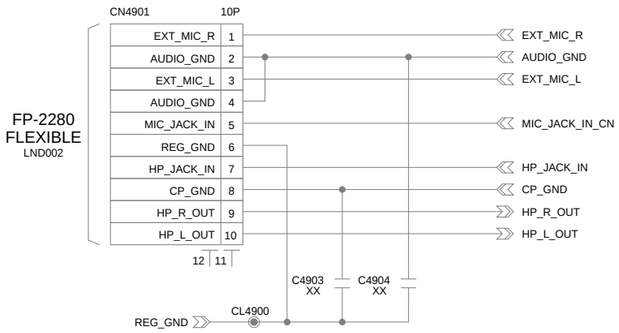

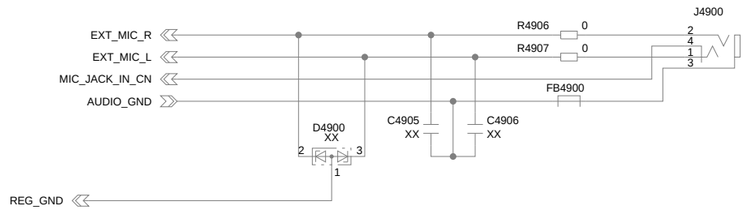

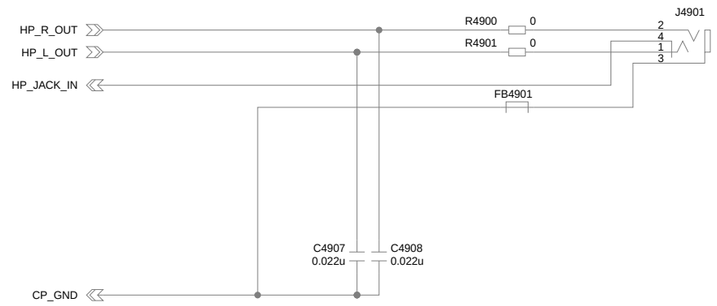

JK-1012 BOARD

XX MARK: NO MOUNT

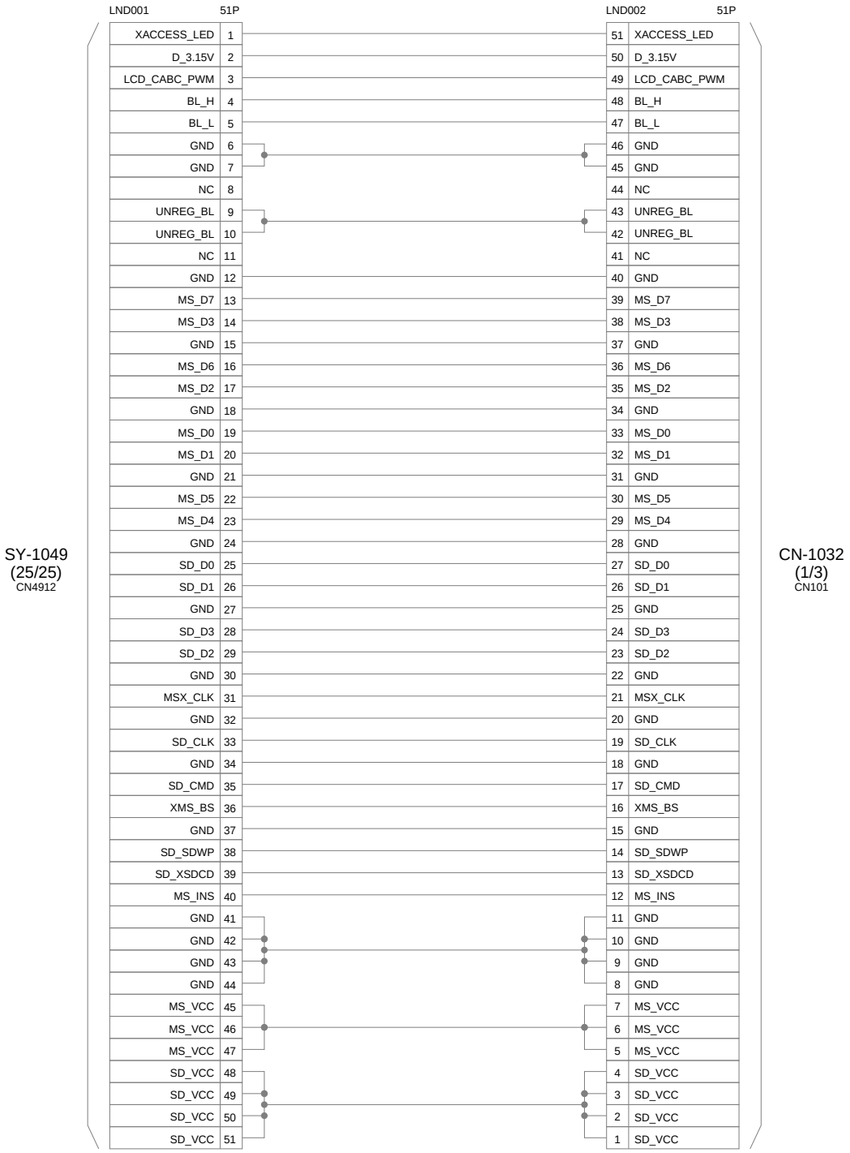

FP-2279 FLEXIBLE BOARD

(PRINTED WIRING BOARD is omitted.)

FP-2280 FLEXIBLE BOARD

(PRINTED WIRING BOARD is omitted.)

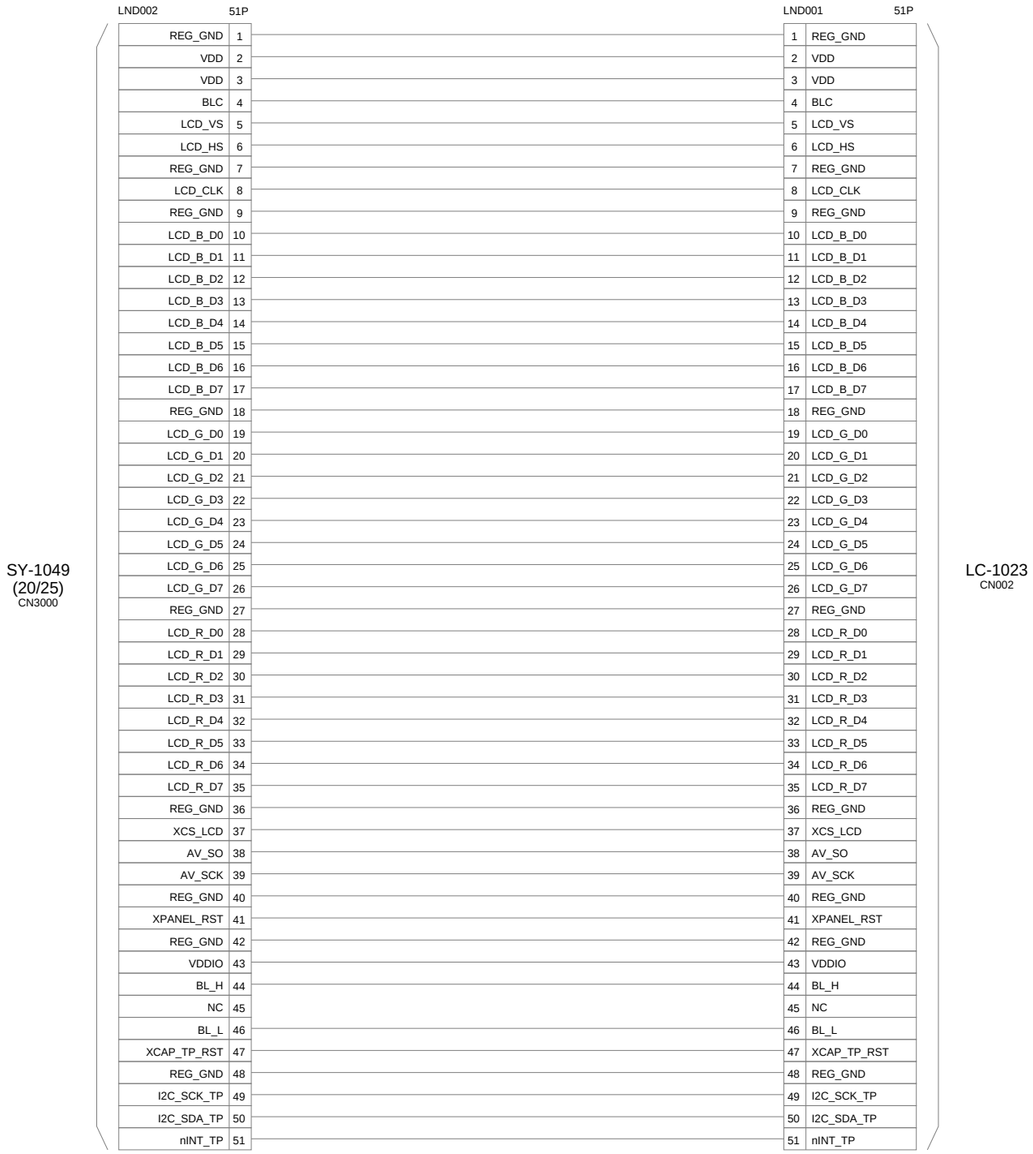

LC-1024 FLEXIBLE BOARD

(PRINTED WIRING BOARD is omitted.)

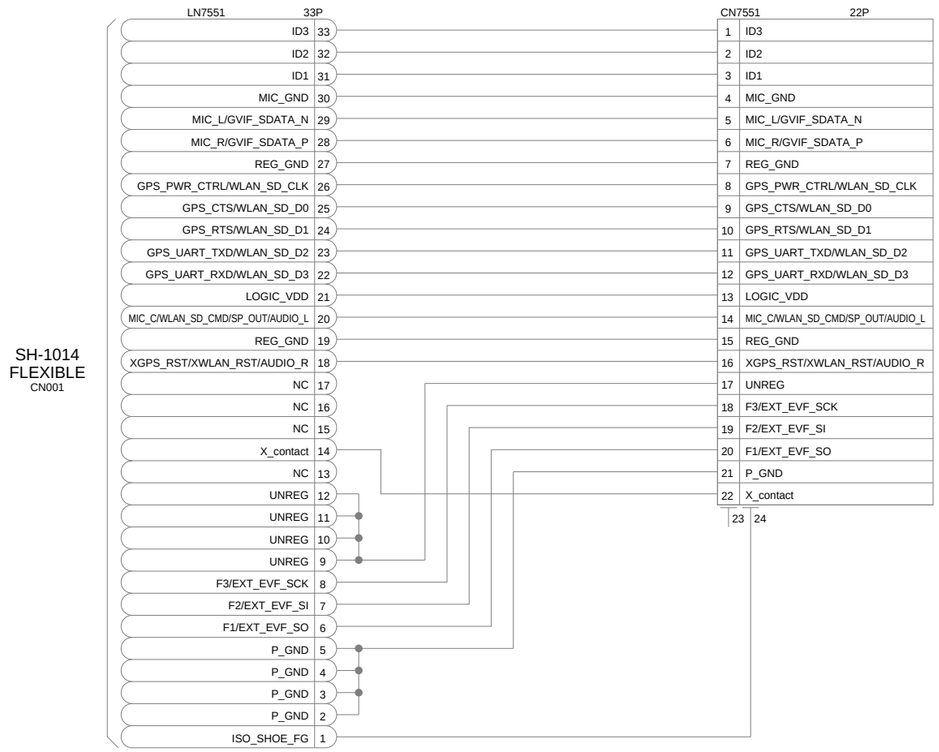

MIS-2000 FLEXIBLE BOARD

IS-1021 BOARD (SIDE A)

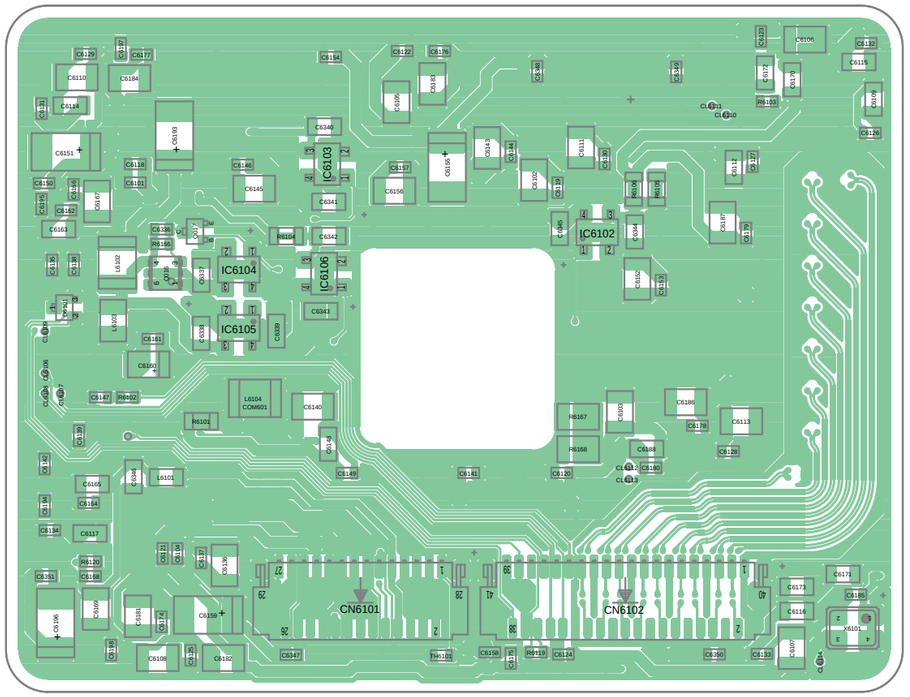

1-893-774-11

IS-1021 BOARD (SIDE B)

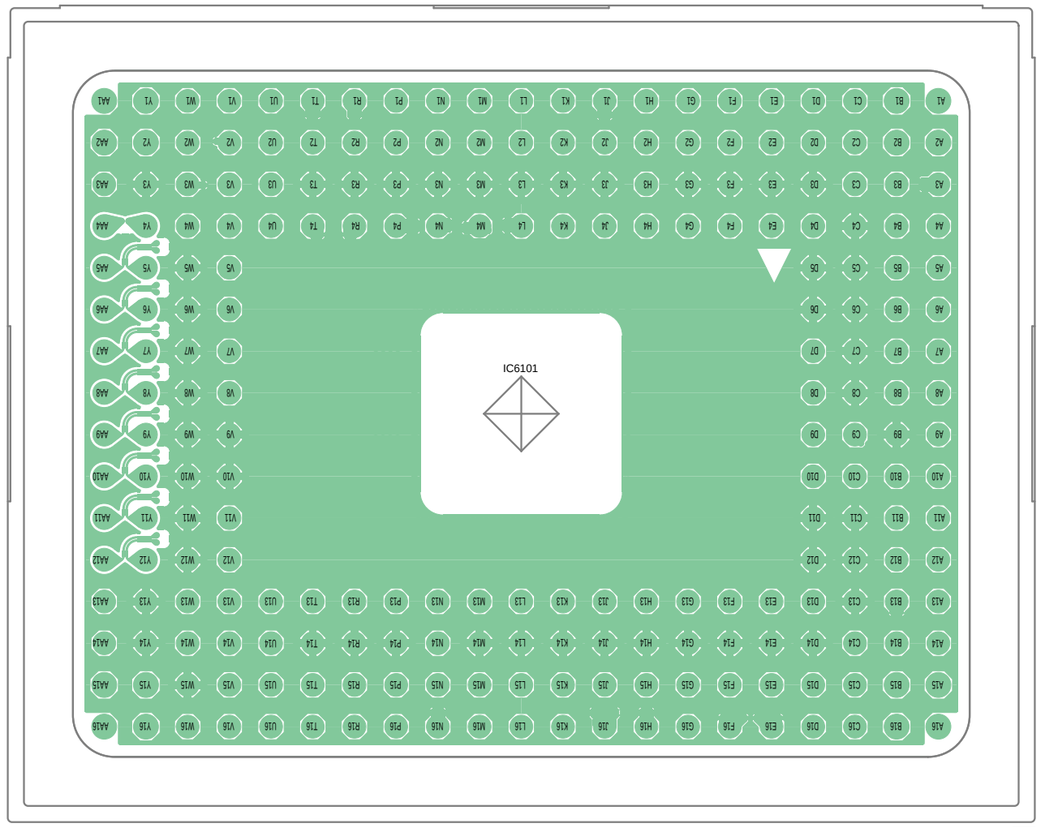

1-893-774-11

: Uses unleaded solder.

SY-1049 BOARD (SIDE A)

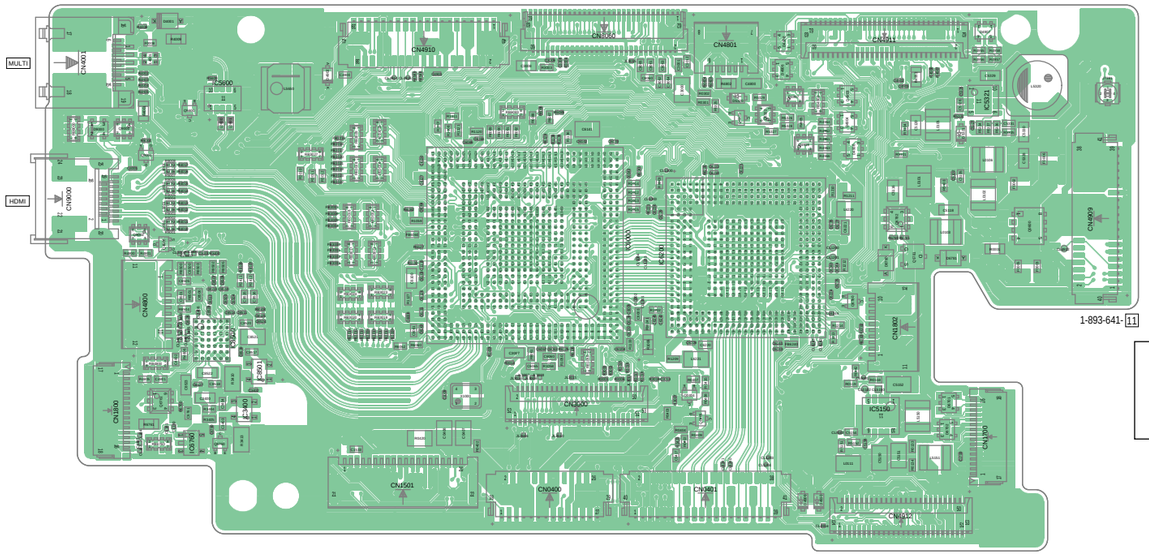

SY-1049 BOARD (SIDE B)

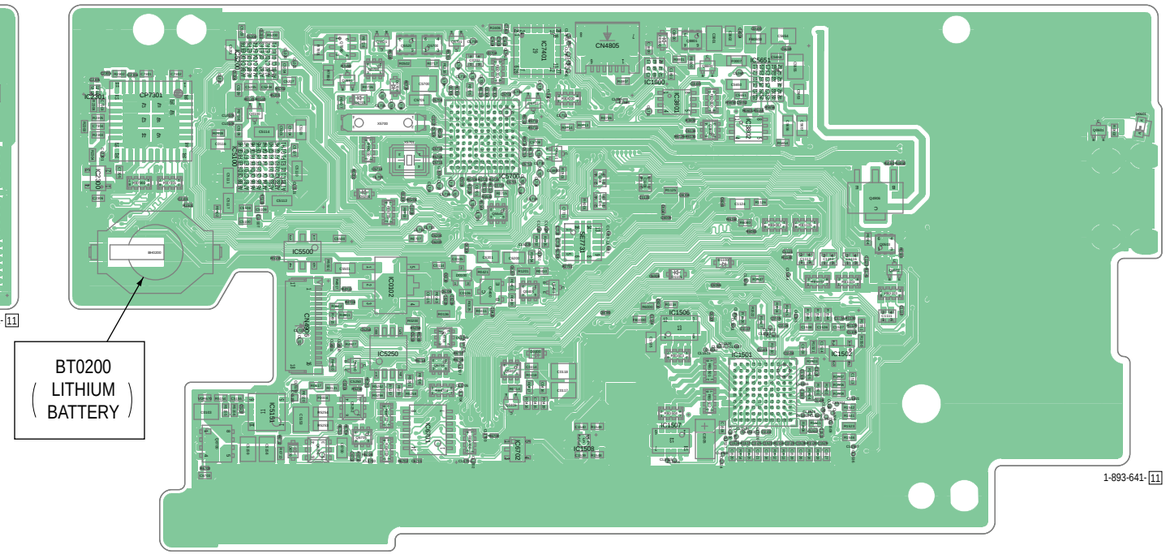

Caution
Danger of explosion if battery is incorrectly replaced.
Replace only with the same or equivalent type.
Dispose of used batteries according to the instructions.

注意
如果电池更换不当会有爆炸危险。
只能用同样类型或等效类型的电池来更换。
务必按照说明处置用完的电池。

注意
電池の交換は，正しく行わないと破裂する恐れがあります。
電池を交換する場合には必ず同じ型名の電池又は同等品と交換してください。
使用済み電池は，取扱指示に従って処分してください。

Note: Note: Replace the battery holder (BH0200) together when replacing the lithium secondary battery (BT0200) on the SY-1049 board. (The battery holder removed once cannot be used again.)
When mounting these parts, mount new battery holder first and attach new lithium battery next.

Note: SY-1049基板のリチウム蓄電池（BT0200）を交換する場合はバッテリホルダ（BH0200）も同時に新品に交換して下さい。（一度使用したバッテリホルダは再使用できません。）
部品取り付けの際は，先にバッテリホルダを取り付けてからリチウム電池を装着して下さい。

: Uses unleaded solder.

CN-1032 BOARD (SIDE A)

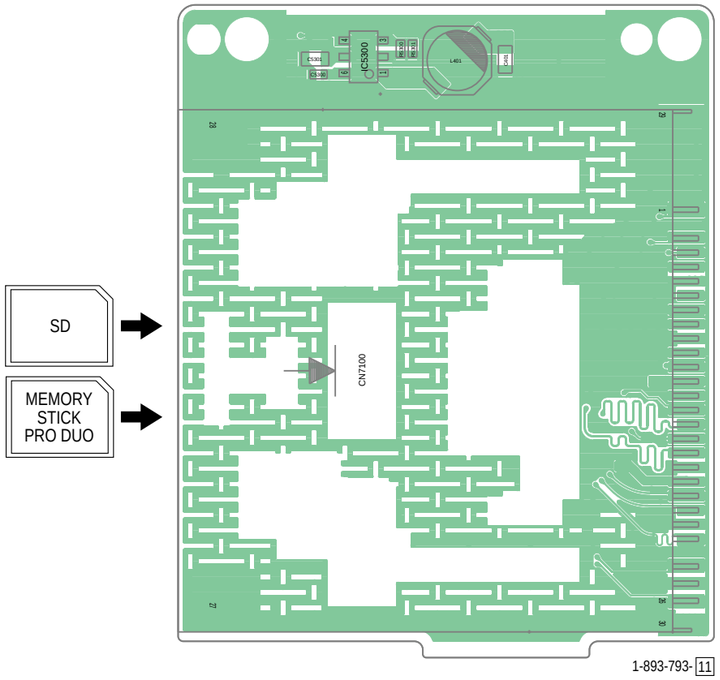

1-893-793-11

CN-1032 BOARD (SIDE B)

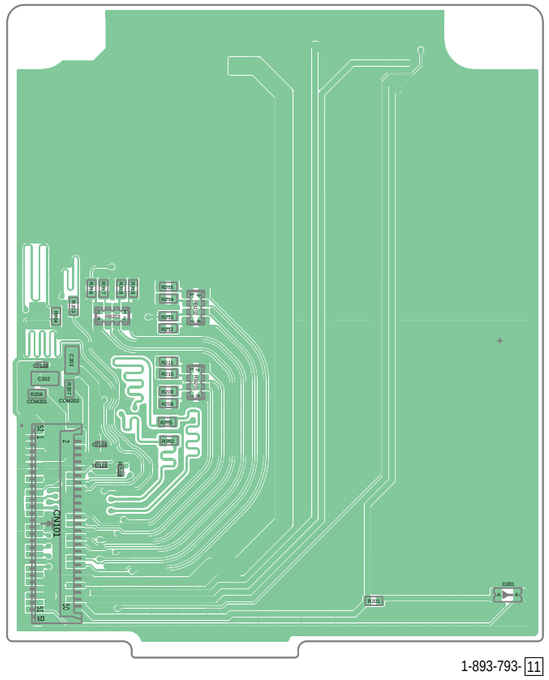

1-893-793-11

JK-1012 BOARD (SIDE A)

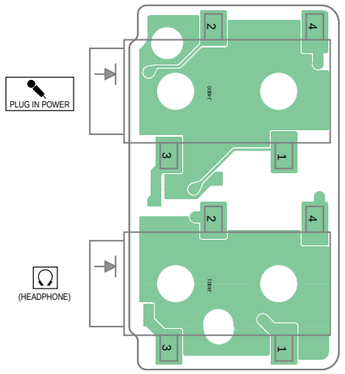

1-893-511-11

JK-1012 BOARD (SIDE B)

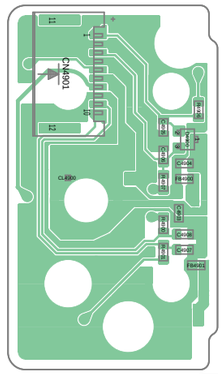

1-893-511-11

MIS-2000 FLEXIBLE BOARD

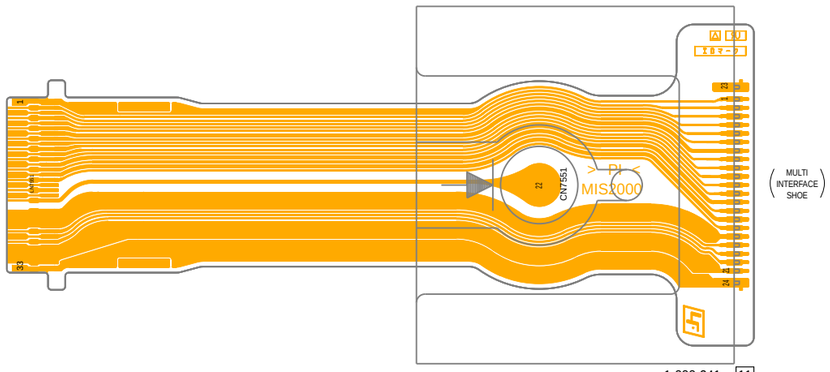

1-888-341-11

: Uses unleaded solder.

RL-1037 FLEXIBLE BOARD

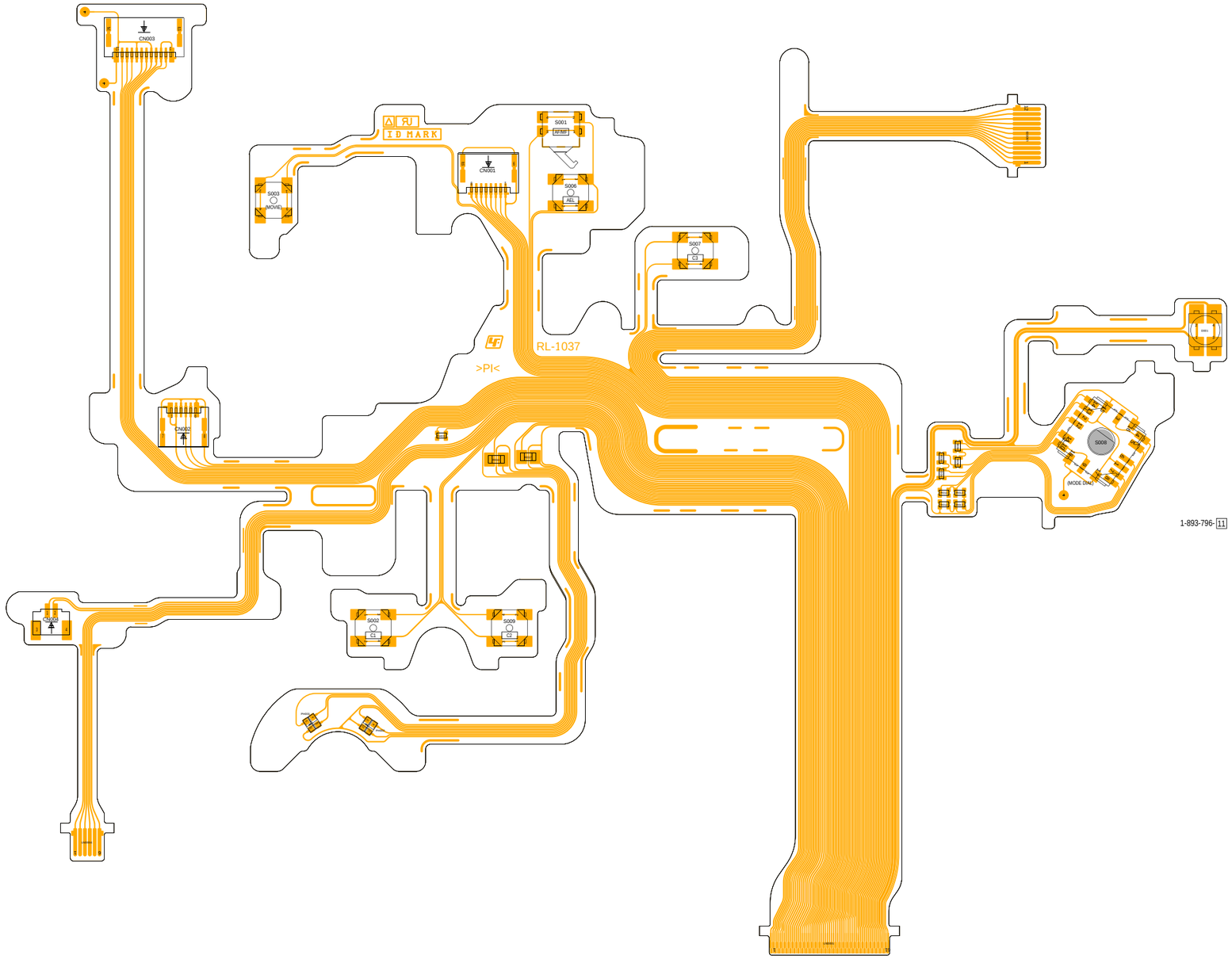

AN-1011 BOARD

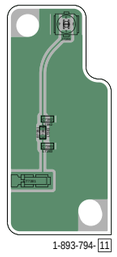

LC-1023 BOARD

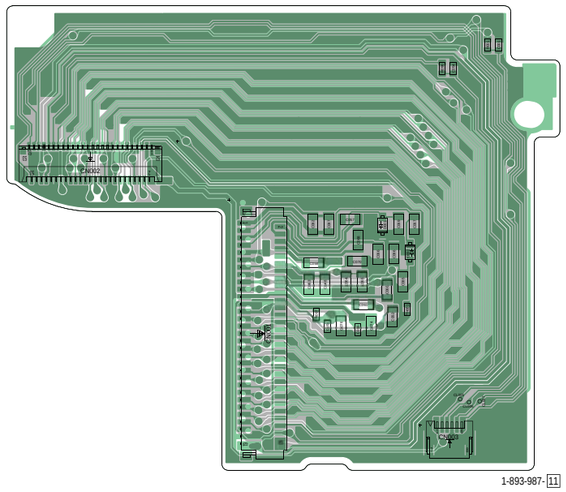

: Uses unleaded solder.

SH-1014 FLEXIBLE BOARD

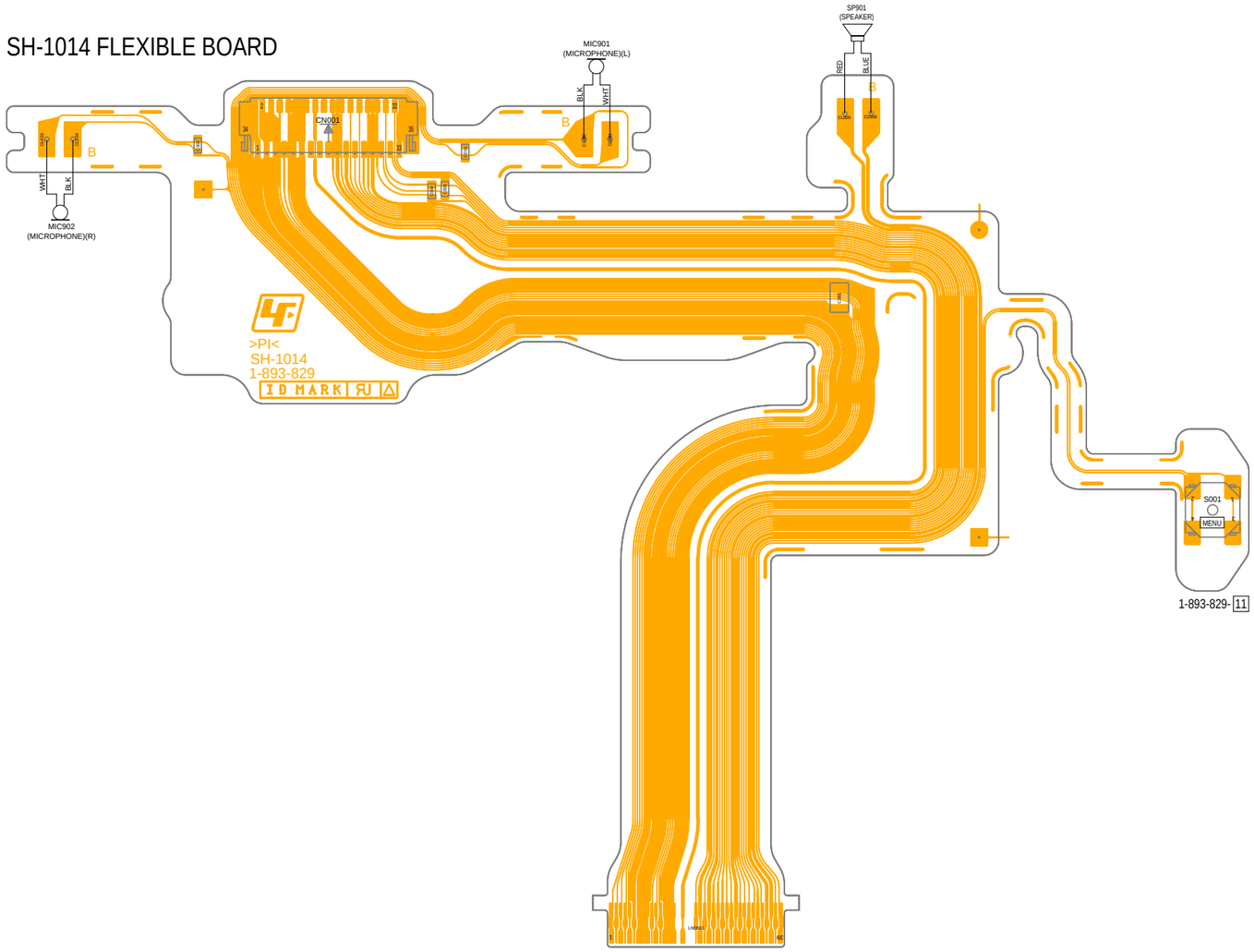

GY-1007 BOARD

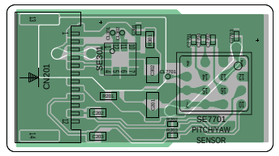

1-893-805- 11

GY-1008 BOARD

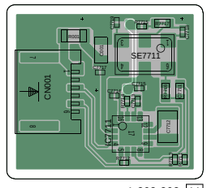

1-893-808- 11

DL-1003 FLEXIBLE BOARD

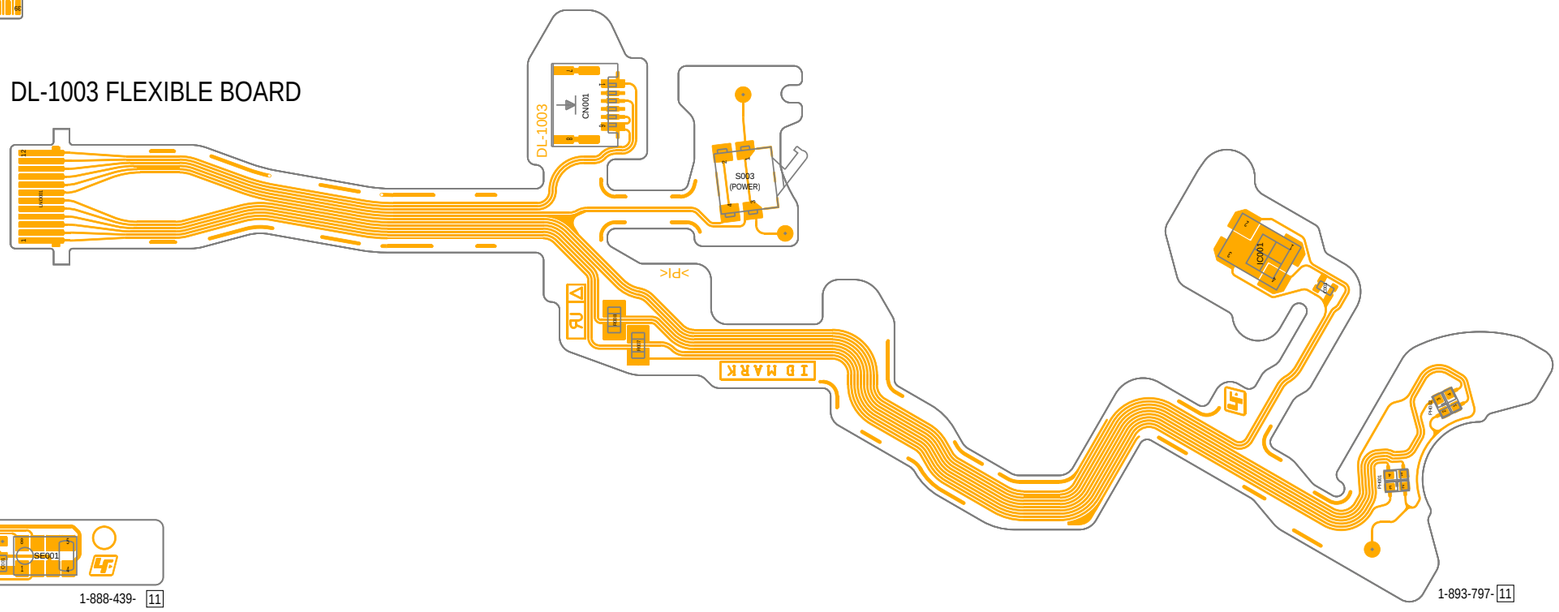

ES-1001 FLEXIBLE BOARD

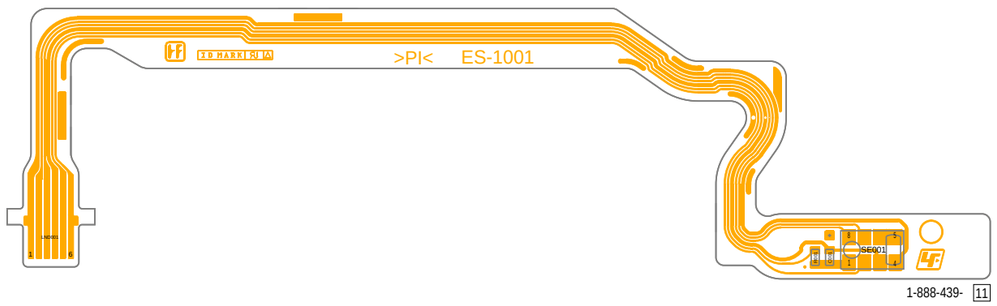

: Uses unleaded solder.